NORTHFIELD STREET UTILITIES IMPROVEMENTS

CITY OF MONTPELIER, VERMONT

CONTRACT 2017-1

FEBRUARY 6, 2017

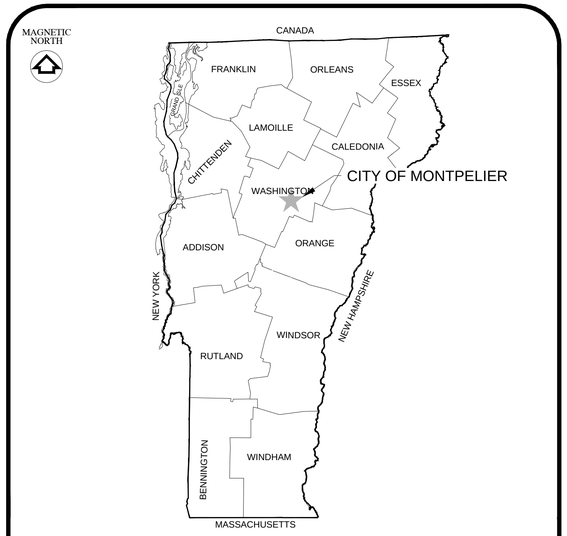

LOCATION PLAN - VERMONT

MONTPELIER, VERMONT

NO SCALE

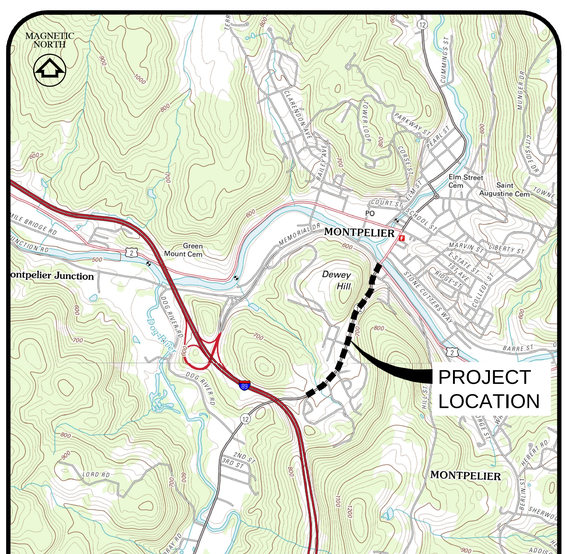

VICINITY PLAN

SCALE: 1" = 2,000'

INDEX OF SHEETS

SHEET	TITLE
	COVER
G1	GENERAL NOTES, LEGEND, AND ABBREVIATIONS
1 G2	TEMPORARY WATER PLAN AND DETAILS
TC1	TRAFFIC CONTROL NOTES AND DETAILS
TC2	TRAFFIC CONTROL PLAN
C1	8" SEWER MAIN PLAN AND PROFILE, SMH 1 TO SMH 7
C2	8" SEWER MAIN PLAN AND PROFILE, SMH 7 TO SMH 11
C3	8" SEWER MAIN PLAN AND PROFILE, SMH 11 TO SMH 15
C4	8" SEWER MAIN PLAN AND PROFILE, SMH 15 TO SMH 19
C5	8" SEWER MAIN PLAN AND PROFILE, SMH 19 TO SMH 23
C6	16" WATER MAIN PLAN AND PROFILE, STATION 0+00W TO 8+00W
C7	16" WATER MAIN PLAN AND PROFILE, STATION 8+00W TO 17+00W
C8	16" WATER MAIN PLAN AND PROFILE, STATION 17+00W TO 26+00W
C9	12" WATER MAIN PLAN AND PROFILE, STATION 26+00W TO 35+00W
C10	12" WATER MAIN PLAN AND PROFILE, STATION 35+00W TO 43+16W
C11	STANDARD SEWER DETAILS
C12	STANDARD WATER DETAILS - BASE BID
C13	STANDARD PE WATER DETAILS - BID ALTERNATE
C14	ROAD AND SIDEWALK PLAN AND PROFILE, STATION 0+00 TO 5+00
C15	ROAD AND SIDEWALK PLAN AND PROFILE, STATION 5+00 TO 10+50
C16	ROAD AND SIDEWALK PLAN AND PROFILE, STATION 10+50 TO 16+00
C17	ROAD AND SIDEWALK PLAN AND PROFILE, STATION 16+00 TO 21+50
C18	ROAD AND SIDEWALK PLAN AND PROFILE, STATION 21+50 TO 27+00
C19	ROAD AND SIDEWALK PLAN AND PROFILE, STATION 27+00 TO 32+50
C20	ROAD AND SIDEWALK PLAN AND PROFILE, STATION 32+50 TO 38+00
C21	ROAD AND SIDEWALK PLAN AND PROFILE, STATION 38+00 TO 42+85
C22	ROAD AND SIDEWALK STANDARD DETAILS
C23	ROAD AND SIDEWALK STANDARD DETAILS
C24	RETAINING WALL ELEVATION AND DETAILS
C25 - C38	CROSS SECTIONS

FINAL DESIGN SUBMITTAL

NOT FOR CONSTRUCTION

PROJECT OFFICIALS

MAYOR

JOHN HOLLAR

CITY COUNCIL

DONA BATE
ANNE WATSON
JESSICA EDGERLY WALSH
TOM GOLONKA
JEAN OLSON
JUSTIN TURCOTTE

CITY MANAGER

WILLIAM J. FRASER

DIRECTOR OF PUBLIC WORKS

THOMAS McARDLE

DUFRESNE GROUP
CONSULTING ENGINEERS
56 Main Street, Suite 200
Springfield, Vermont 05156
E-mail: info@dufresnegroup.com
Web: www.dufresnegroup.com
• • •
Springfield, VT • Tel: (802) 674-2904 Fax: (802) 674-2913
Barre, VT • Tel: (802) 479-3698
St. Johnsbury, VT • Tel: (802) 748-8605
Manchester, VT • Tel: (802) 768-8291
• • •
Dufresne Group is owned by Dufresne & Associates, PC

GENERAL NOTES:

1. EXISTING PLAN VIEW BASEMAP INFORMATION PROVIDED BY CITY OF MONTPELIER. EXISTING FEATURES SHOWN ON THE BASEMAP MAY DIFFER FROM CURRENT FIELD CONDITIONS.
2. SOIL BORINGS WERE PERFORMED BY MIKE'S BORING AND CORING IN JUNE 2016. SOIL BORING LOCATIONS ARE SHOWN ON THE PLANS AND PROFILES. REFER TO THE SPECIFICATIONS FOR BORING LOGS.
3. ALL CONSTRUCTION ACTIVITIES SHALL BE CONFINED TO LANDS OWNED BY THE CITY OF MONTPELIER, IN PUBLIC RIGHT-OF-WAY OR IN EASEMENT AREAS AVAILABLE TO THE CITY OR CONTRACTOR.
4. GENERALLY HEAVY OR DARK LINE WORK OR NOTES REFER TO PROPOSED IMPROVEMENTS. LIGHT LINE WORK OR SCREENED GENERALLY REFERS TO EXISTING FEATURES.
5. ALL EXISTING UNDERGROUND UTILITIES WERE LOCATED USING THE BEST AVAILABLE INFORMATION. CONTRACTOR IS RESPONSIBLE FOR PROTECTION OF ALL UTILITIES WHETHER OR NOT THEY ARE SHOWN ON THE PLANS. ALL REPAIRS TO DAMAGED UTILITIES SHALL BE MADE BY THE CONTRACTOR USING MATERIALS APPROVED BY THE ENGINEER PRIOR TO INSTALLATION.
6. EXPLORATORY EXCAVATION IS REQUIRED TO LOCATE UNDERGROUND UTILITIES. CONTRACTOR SHALL USE EXTREME CAUTION TO PREVENT DAMAGE TO EXISTING UTILITIES. CONTRACTOR SHALL COORDINATE WITH DIG SAFE (1-888-DIG SAFE) A MINIMUM OF 72 HOURS PRIOR TO EXCAVATION.
7. CONTRACTOR SHALL VERIFY LOCATION OF ALL OVERHEAD AND UNDERGROUND ELECTRIC, CABLE AND TELEPHONE LINES AND TAKE NECESSARY PRECAUTIONS DURING CONSTRUCTION. CONTRACTOR SHALL CONTACT THE LOCAL POWER UTILITY AND TELEPHONE UTILITY REGARDING ANY NECESSARY SUPPORT OF ANY UTILITY POLES DURING CONSTRUCTION. LOCAL ELECTRIC UTILITY IS GREEN MOUNTAIN POWER. LOCAL PHONE UTILITY IS FAIRPOINT COMMUNICATIONS.
8. THE CONTRACTOR SHALL ADJUST ALL CATCH BASIN COVERS AND FRAMES TO 3.5" ABOVE SUBGRADE WITHIN THE ROAD RECONSTRUCTION LIMITS. THE CONTRACTOR SHALL INSTALL STEEL PLATES OVER ALL SMH STRUCTURES, CONTRACTOR TO FURNISH FRAME AND COVERS TO CITY, BUT DOES NOT REQUIRE INSTALLATION. CONTRACTOR IS RESPONSIBLE FOR COORDINATING WITH ELECTRIC AND PHONE UTILITY COMPANIES FOR ANY WORK RELATED TO ADJUSTING THE GRADE OF COVERS ON UNDERGROUND VAULTS LOCATED WITHIN THE ROAD RECONSTRUCTION LIMITS.
9. CONTRACTOR SHALL MAKE EVERY EFFORT NECESSARY TO ALLOW UNRESTRICTED ACCESS TO AND FROM DRIVEWAYS AND SIDE STREETS LOCATED ALONG THE PROJECT SITE. REFER TO SPECIAL CONDITIONS AND TRAFFIC CONTROL PLANS FOR ADDITIONAL INFORMATION AND REQUIREMENTS.
10. TECHNICAL SPECIFICATIONS PROVIDE NECESSARY INFORMATION AND ARE PART OF THE CONTRACT DOCUMENTS FOR THIS PROJECT.
11. ALL DISTURBED GRASSED AREAS SHALL BE RESTORED TO CLASS A RESTORATION UNLESS OTHERWISE SHOWN. CONTRACTOR IS RESPONSIBLE FOR REMOVAL, CARE & REPLANTING OF ALL PLANTINGS AND SHRUBS DISTURBED DURING CONSTRUCTION.
12. LISTING OF ADAPTERS, FITTINGS, NIPPLES, ETC IS FOR THE CONVENIENCE OF THE CONTRACTOR ONLY. ADDITIONAL MATERIAL MAY BE REQUIRED.
13. HORIZONTAL BENDS THAT MAY BE REQUIRED ARE SHOWN ON THE PLAN ONLY. VERTICAL BENDS THAT MAY BE REQUIRED ARE SHOWN ON THE PROFILE ONLY.
14. MINIMUM VERTICAL CLEARANCE BETWEEN NEW WATER MAINS AND ALL EXISTING UTILITIES, EXCEPT SEWERS AND STORM DRAINS TO BE SIX (6) INCHES AT CROSSING LOCATIONS. FOR SEWERS AND STORM DRAINS SEE DETAIL ON SHEETS C11.
15. ALL BURIED FITTINGS MUST BE BLOCKED. REFER TO THRUST BLOCK DETAILS, HYDRANT ASSEMBLY DETAIL AND TRENCH DETAIL SHOWN ON SHEETS C12. MECHANICAL JOINT FITTINGS, VALVES AND HYDRANT SHALL INCORPORATE A GRIP RING RETAINER GLAND IN ADDITION TO THRUST BLOCKS.
16. MECHANICAL JOINT RESTRAINTS SHALL BE USED WHERE VALVES WILL BE SUBJECTED TO SERVICE PRESSURES ON ONE SIDE BEFORE BEING FULLY INCORPORATED INTO THE DISTRIBUTION SYSTEM. ANY ADJACENT PUSH-ON JOINTS SHALL BE FULLY RESTRAINED AS NECESSARY.
17. WATER MAINS TO HAVE 6.0 FEET MINIMUM COVER UNLESS OTHERWISE STATED OR SHOWN ON THE PROFILES. WHEN 6.0 FEET OF COVER CANNOT BE MAINTAINED 4" RIGID BOARD INSULATION SHALL BE USED. DEPTH COVER SHALL NOT BE LESS THAN 4 FEET EVEN WITH INSULATION.
18. CONTRACTOR IS RESPONSIBLE FOR FLUSHING, PRESSURE TESTING AND DISINFECTING ALL NEW WATER MAIN. ANY NECESSARY TEMPORARY CHLORINE INJECTION POINTS SHALL BE INSTALLED WHERE REQUIRED AND REMOVED UPON COMPLETION OF TESTING.
19. WHERE THE WATER MAIN CROSSES OVER OR UNDER A STORM DRAIN, A FULL LENGTH OF D.I. WATER PIPE SHALL BE PLACED WITH THE MIDDLE OF THE PIPE CENTERED AT THE STORM DRAIN.
20. NEW WATER SERVICES ARE REQUIRED IF SHOWN. NEW WATER SERVICES INCLUDE NEW CORPORATION, 1" COPPER (OR AS OTHERWISE SHOWN ON THE PLANS) TO NEW CURB STOP PLACED AT PROPERTY LINE OR CITY RIGHT OF WAY. FINAL LOCATION TO BE COORDINATED WITH THE OWNER AND ENGINEER.
21. TEMPORARY WATER IS REQUIRED FOR ALL WATER SYSTEM CUSTOMERS WITHIN THE PROJECT AREA. CONTRACTOR SHALL PROVIDED A TEMPORARY WATER PLAN TO THE ENGINEER FOR REVIEW AND APPROVAL PRIOR TO COMMENCEMENT OF WORK.
22. EACH HYDRANT ASSEMBLY SHALL INCLUDE AN ANCHOR TEE, RESILIENT WEDGE GATE VALVE, PVC BRANCH NIPPLE, HYDRANT, THRUST BLOCKS, AND RESTORATION AS SHOWN IN THE DETAIL. EACH ITEM SHALL BE PAID FOR SEPARATELY.
23. ALL WATER MAIN PIPES TO BE ABANDONED AS PART OF THIS PROJECT SHALL BE REMOVED AND DISPOSED OF AT ALL LOCATIONS WHERE THE PIPES ARE ENCOUNTERED WITHIN THE CONSTRUCTION TRENCH LIMITS. PIPES SHALL BE DEWATERED AND PLUGGED OR CAPPED AT THE CONSTRUCTION TRENCH LIMITS.
24. THE EXISTING WATER MAINS WITHIN THE PROJECT AREAS ARE CAST IRON UNLESS OTHERWISE NOTED.
25. THERE MAY BE OTHER CONSTRUCTION PROJECTS IN THE CITY VICINITY WITH CONCURRENT SCHEDULES. COORDINATION FOR TRAFFIC OR UTILITY CONTROL MAY BE NECESSARY BETWEEN CONTRACTORS. CONTRACTOR WILL NOT IMPEDE ON OTHER CONSTRUCTION PROJECTS.

LOCAL VALVE OPERATION:

1. PROPOSED MAIN LINE VALVES SHALL OPEN LEFT OR COUNTER-CLOCKWISE. OPERATION OF VALVES WILL BE PERFORMED BY THE OWNER'S STAFF ONLY.

ABB	ABBREVIATION
AC	ASBESTOS CEMENT
BFV	BUTTERFLY VALVE
CB	CATCH BASIN
CI	CAST IRON
CL	CENTER LINE
CMP	CORRUGATED METAL PIPE
CMPAC	CORRUGATED METAL PIPE ASPHALT COATED
CU	COPPER
DI	DUCTILE IRON
DIA	DIAMETER
EL	ELEVATION
FF	FINISHED FLOOR
FM	FORCED MAIN
GALV	GALVANIZED
GND	GROUND
GV	GATE VALVE
HDPE	HIGH DENSITY POLYETHYLENE
HYD	HYDRANT
INV	INVERT
MB	MAIL BOX
MJ	MECHANICAL JOINT
OHW	OVERHEAD POWER
PL	PROPERTY LINE
RW	RESILIENT WEDGE
S	SEWER
SMH	SEWER MANHOLE
STA	STATION
T	TELEPHONE
TBM	TEMPORARY BENCH MARK
TYP	TYPICAL
UG	UNDERGROUND
UGE	UNDERGROUND ELECTRIC
UP	UTILITY POLE
VCP	VITRIFIED CLAY PIPE
W	WATER LINE
W/	WITH
WSO	WATER SHUT OFF

GENERAL LEGEND

EXISTING:		PROPOSED:	
	RIGHT-OF-WAY	W	WATER MAIN
	EDGE OF PAVEMENT	WS	WATER SERVICE
	EDGE OF GRAVEL		GATE VALVE
	TREE LINE		BUTTERFLY VALVE
OHW	OVERHEAD UTILITY		HYDRANT
W	WATER MAIN		WATER SHUT OFF
D	STORM DRAIN MAIN		WATER MAIN FITTING
S	SEWER MAIN		SOLID SLEEVE
T	BURIED TELEPHONE		REDUCER
	UTILITY POLE / GUY		MANUAL AIR RELEASE
	SIGN		END CAP
	WATER VALVE	S	SEWER MAIN
	WATER SHUT OFF	S	SEWER SERVICE
	FIRE HYDRANT		SEWER MANHOLE
	SEWER MANHOLE	D	STORM DRAIN
	DRAIN MANHOLE		CATCH BASIN
	TELEPHONE MANHOLE	UD	UNDER DRAIN
	CATCH BASIN		SIDEWALK
	TREE / SHRUB		SIDEWALK RAMP
	BUILDING		DETECTABLE WARNING SURFACE
	FENCE		BIKE LANE
B-1	SOIL BORING		
	LIGHT		

FINAL DESIGN SUBMITTAL
NOT FOR CONSTRUCTION

DUFRESNE GROUP
CONSULTING ENGINEERS
56 Main Street, Suite 200
Springfield, Vermont 05156
E-mail: info@dufresnegroup.com
Web: www.dufresnegroup.com
• • •
Springfield, VT • Tel: (802) 674-2904 Fax: (802) 674-2913
Barre, VT • Tel: (802) 479-3698
St. Johnsbury, VT • Tel: (802) 748-8605
Manchester, VT • Tel: (802) 768-8291
• • •
Dufresne Group is owned by Dufresne & Associates, PC

STATE OF VERMONT — ROBERT E. DUFRESNE — NO. 3834 — CIVIL — LICENSED PROFESSIONAL ENGINEER

2-6-17

REVISIONS

DATE	COMMENTS	BY

THIS DRAWING SHALL NOT BE REUSED OR ALTERED IN ANY WAY WITHOUT THE WRITTEN APPROVAL AND AUTHORITY OF DUFRESNE GROUP. ANY REVISIONS SHALL BE MADE BY DUFRESNE GROUP ©

NORTHFIELD STREET UTILITIES IMPROVEMENTS

GENERAL NOTES, LEGEND, AND ABBREVIATIONS

CITY OF MONTPELIER, VERMONT

Project #	8160003
Project Mgr.	R.E. DUFRESNE
Design by	B.L. BAKER
Drawn by	B.L. BAKER
Reviewed by	T.P. KNAPP
Approved by	R.E. DUFRESNE
Date	FEBRUARY 6, 2017
Scale	AS SHOWN

G1

FILE: R:\Montpelier VT\City of Montpelier\8160003 - Northfield Street Utilities\CAD\8160002 - Northfield Street General Sheets.dwg Feb 08, 2017 - 5:27pm

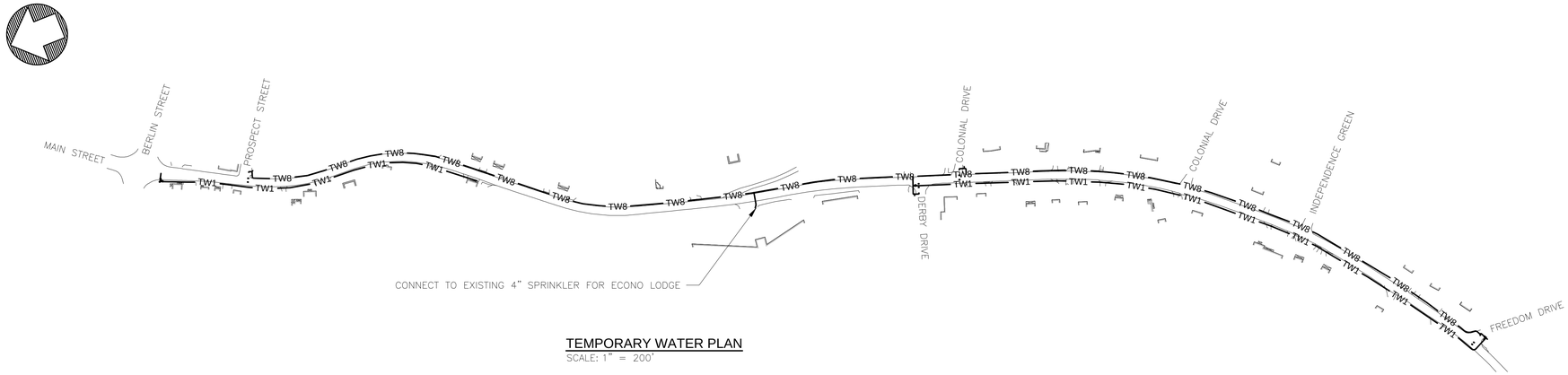

TEMPORARY WATER PLAN
SCALE: 1" = 200'

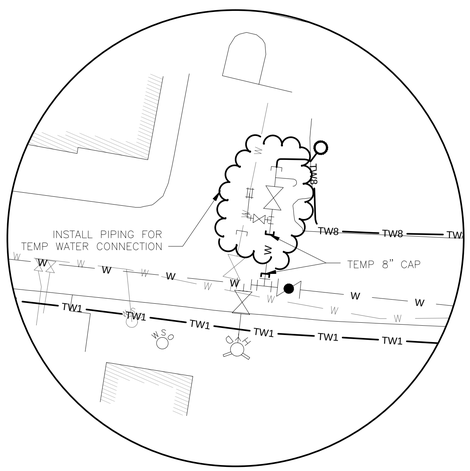

PROSPECT STREET CONNECTION
SCALE: 1" = 20'

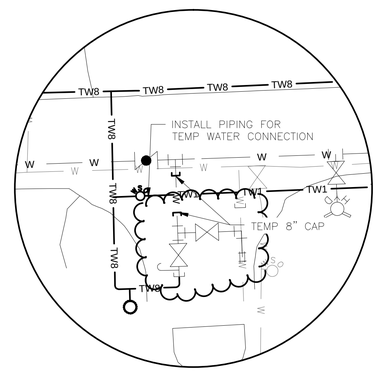

DERBY DRIVE CONNECTION
SCALE: 1" = 20'

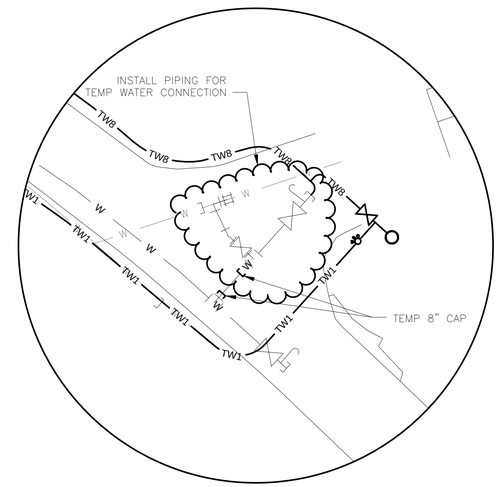

FREEDOM DRIVE CONNECTION
SCALE: 1" = 20'

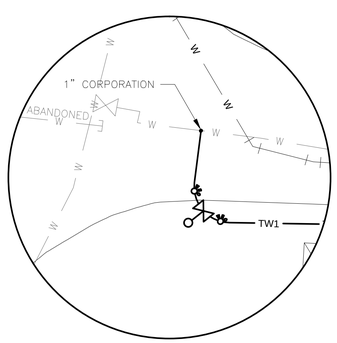

BERLIN STREET CONNECTION
SCALE: 1" = 20'

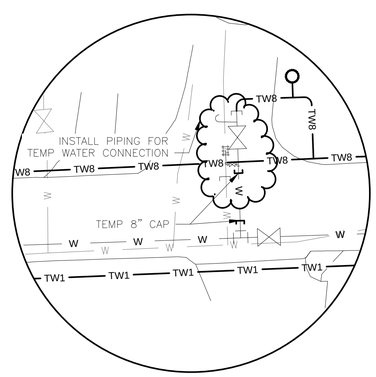

COLONIAL DRIVE AND INDEPENDENCE GREEN CONNECTION
SCALE: 1" = 20'

TEMPORARY WATER LEGEND

TW8 — TW8	8" HDPE
TW1 — TW1	1" HDPE
	DI END CAP
	8" GATE VALVE
	1" BALL VALVE
	1" PRV
	BLOW OFF ASSEMBLY

NOTES:
1. TEMPORARY 1" PRV SHALL BE SUITABLE TO REDUCE FROM 220 PSI TO 120 PSI.
2. TEMPORARY WATER IS SHOWN IN SCHEMATIC FORM. ADDITIONAL PIPING, EQUIPMENT, AND CONNECTIONS MAY BE NEEDED.

FINAL DESIGN SUBMITTAL
NOT FOR CONSTRUCTION

DUFRESNE GROUP
CONSULTING ENGINEERS
56 Main Street, Suite 200
Springfield, Vermont 05156
E-mail: info@dufresnegroup.com
Web: www.dufresnegroup.com
Springfield, VT • Tel: (802) 674-2904 Fax: (802) 674-2913
Barre, VT • Tel: (802) 479-3698
St. Johnsbury, VT • Tel: (802) 748-8605
Manchester, VT • Tel: (802) 768-8291
Dufresne Group is owned by Dufresne & Associates, PC

STATE OF VERMONT
ROBERT E. DUFRESNE
NO. 3834
CIVIL
LICENSED
PROFESSIONAL ENGINEER
2-6-17

REVISIONS

DATE	COMMENTS	BY

THIS DRAWING SHALL NOT BE REUSED OR ALTERED IN ANY WAY WITHOUT THE WRITTEN APPROVAL AND AUTHORITY OF DUFRESNE GROUP. ANY REVISIONS SHALL BE MADE BY DUFRESNE GROUP ©

NORTHFIELD STREET UTILITIES IMPROVEMENTS

TEMPORARY WATER PLAN AND DETAILS

CITY OF MONTPELIER, VERMONT

Project #	8160003
Project Mgr.	R.E. DUFRESNE
Design by	B.L. BAKER
Drawn by	B.L. BAKER
Reviewed by	T.P. KNAPP
Approved by	R.E. DUFRESNE
Date	FEBRUARY 6, 2017
Scale	AS SHOWN

G2

FILE: R:\Montpelier VT\City of Montpelier\8160003 - Northfield Street Utilities\CAD\8160002 - Northfield Street General Sheets.dwg Feb 08, 2017 - 5:27pm

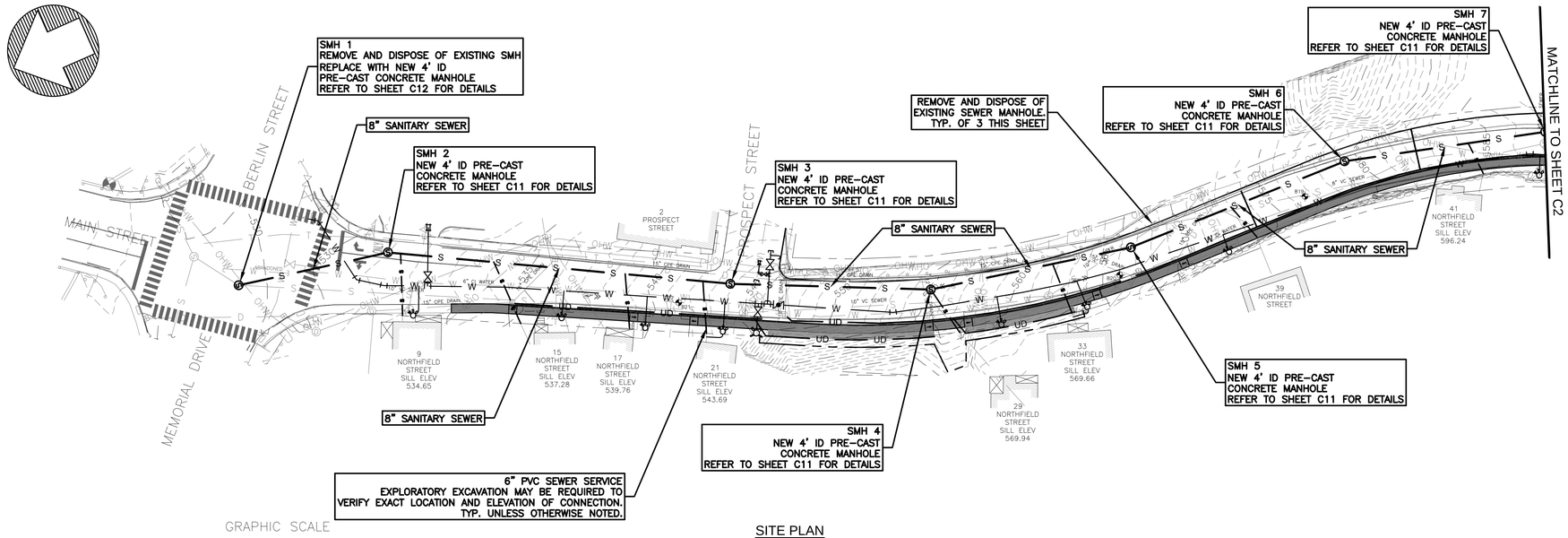

SITE PLAN
SCALE: 1" = 40'

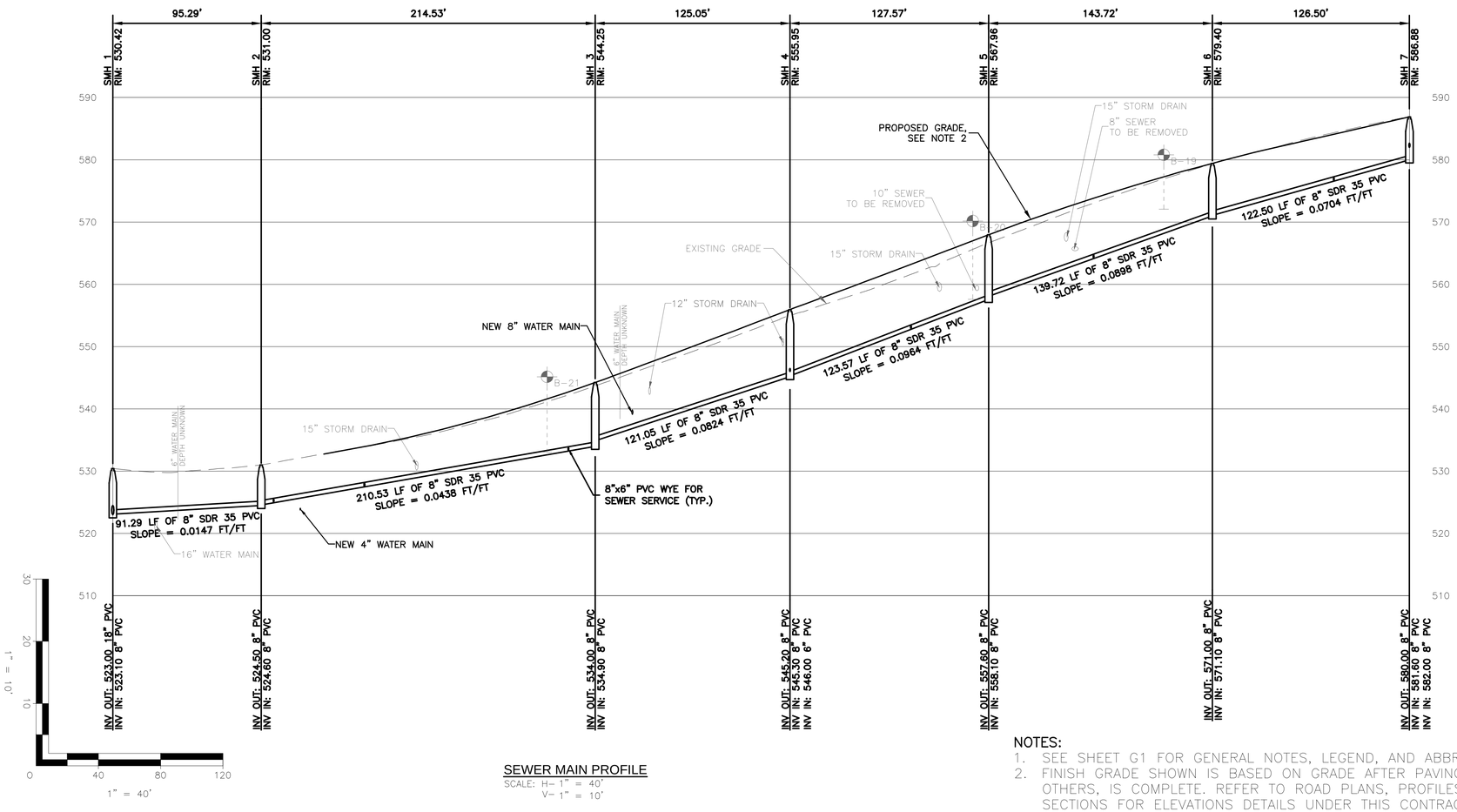

SEWER MAIN PROFILE
SCALE: H- 1" = 40'
V- 1" = 10'

NOTES:
1. SEE SHEET G1 FOR GENERAL NOTES, LEGEND, AND ABBREVIATIONS.
2. FINISH GRADE SHOWN IS BASED ON GRADE AFTER PAVING, BY OTHERS, IS COMPLETE. REFER TO ROAD PLANS, PROFILES, AND SECTIONS FOR ELEVATIONS DETAILS UNDER THIS CONTRACT.

FINAL DESIGN SUBMITTAL
NOT FOR CONSTRUCTION

DUFRESNE GROUP
CONSULTING ENGINEERS
56 Main Street, Suite 200
Springfield, Vermont 05156
E-mail: info@dufresnegroup.com
Web: www.dufresnegroup.com
Springfield, VT • Tel: (802) 674-2904 Fax: (802) 674-2913
Barre, VT • Tel: (802) 479-3698
St. Johnsbury, VT • Tel: (802) 748-8605
Manchester, VT • Tel: (802) 768-8291
Dufresne Group is owned by Dufresne & Associates, PC

STATE OF VERMONT
ROBERT E. DUFRESNE
NO. 3834
CIVIL
LICENSED PROFESSIONAL ENGINEER
2-6-17

REVISIONS

DATE	COMMENTS	BY

THIS DRAWING SHALL NOT BE REUSED OR ALTERED IN ANY WAY WITHOUT THE WRITTEN APPROVAL AND AUTHORITY OF DUFRESNE GROUP. ANY REVISIONS SHALL BE MADE BY DUFRESNE GROUP ©

NORTHFIELD STREET UTILITIES IMPROVEMENTS

8" SEWER MAIN PLAN AND PROFILE SMH 1 TO SMH 7

CITY OF MONTPELIER, VERMONT

Project #	8160003
Project Mgr.	R.E. DUFRESNE
Design by	B.L. BAKER
Drawn by	B.L. BAKER
Reviewed by	T.P. KNAPP
Approved by	R.E. DUFRESNE
Date	FEBRUARY 6, 2017
Scale	AS SHOWN

C1

FILE: R:\Montpelier VT\City of Montpelier\8160003 - Northfield Street Utilities\CAD\8160002 - Northfield Street Sewer Plans.dwg Feb 08, 2017 - 5:28pm

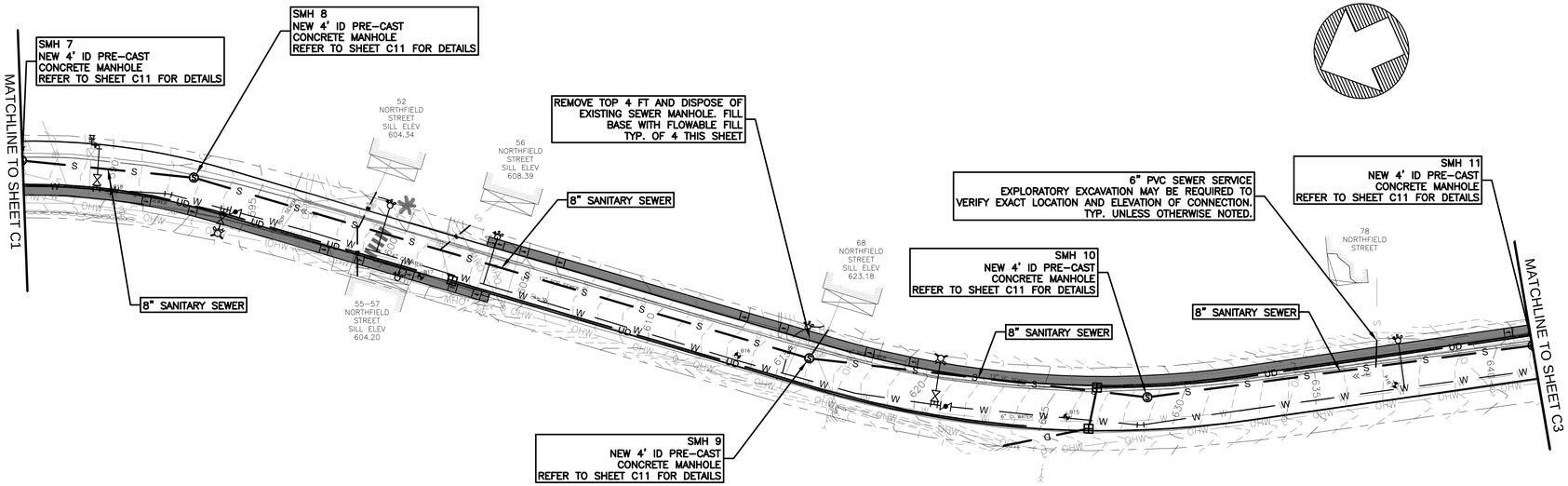

GRAPHIC SCALE

40 0 20 40 80 160

(IN FEET)

SITE PLAN

SCALE: 1" = 40'

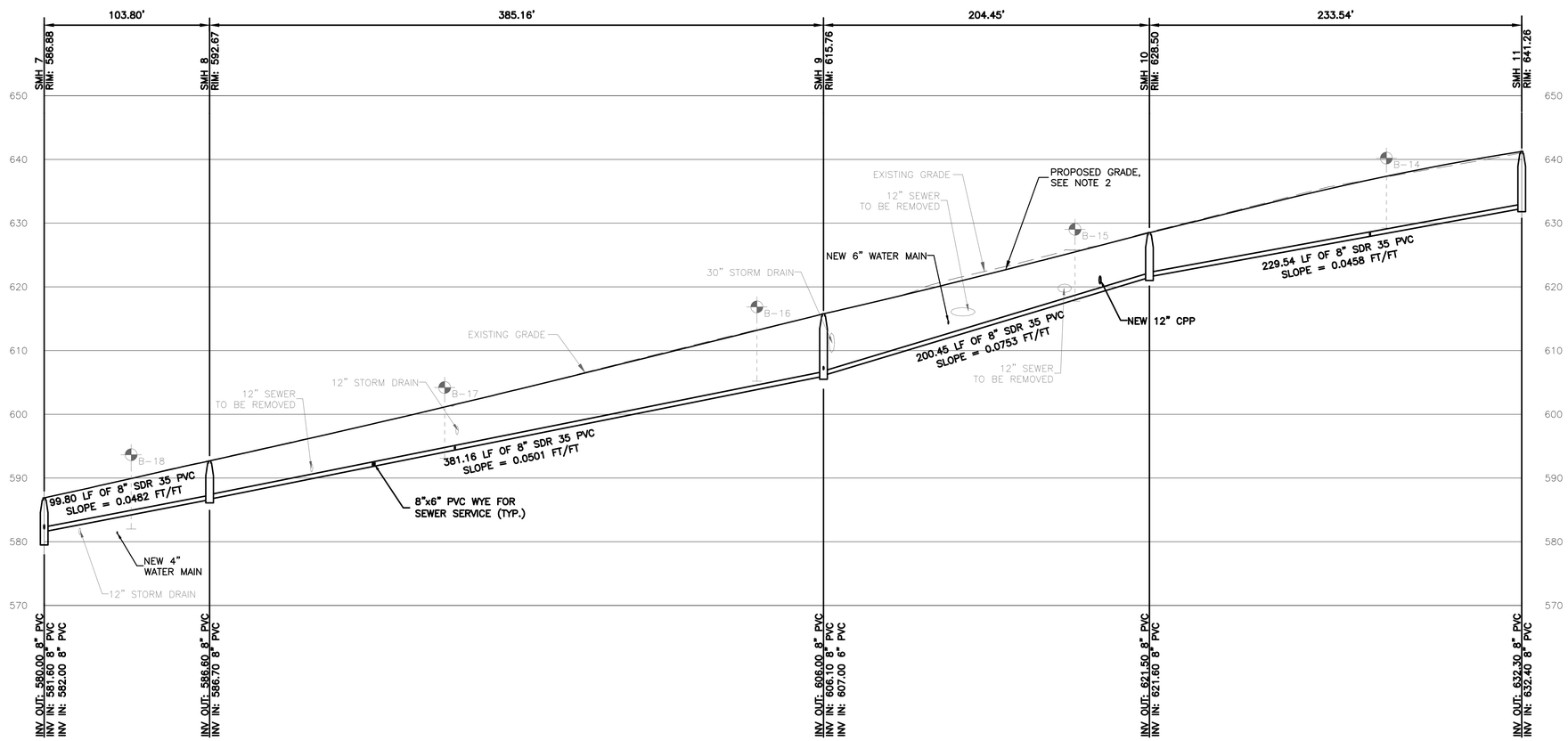

SEWER MAIN PROFILE

SCALE: H- 1" = 40'
V- 1" = 10'

NOTES:

1. SEE SHEET G1 FOR GENERAL NOTES, LEGEND, AND ABBREVIATIONS.
2. FINISH GRADE SHOWN IS BASED ON GRADE AFTER PAVING, BY OTHERS, IS COMPLETE. REFER TO ROAD PLANS, PROFILES, AND SECTIONS FOR ELEVATIONS DETAILS UNDER THIS CONTRACT.

FINAL DESIGN
SUBMITTAL
NOT FOR CONSTRUCTION

DUFRESNE GROUP
CONSULTING ENGINEERS
56 Main Street, Suite 200
Springfield, Vermont 05156
E-mail: info@dufresnegroup.com
Web: www.dufresnegroup.com
• • •
Springfield, VT • Tel: (802) 674-2904 Fax: (802) 674-2913
Barre, VT • Tel: (802) 479-3698
St. Johnsbury, VT • Tel: (802) 748-8605
Manchester, VT • Tel: (802) 768-8291
• • •
Dufresne Group is owned by Dufresne & Associates, PC

STATE OF VERMONT
RENE E. DUFRESNE
NO. 3834
CIVIL
LICENSED PROFESSIONAL ENGINEER

2-6-17

REVISIONS

DATE	COMMENTS	BY

THIS DRAWING SHALL NOT BE REUSED OR ALTERED IN ANY WAY WITHOUT THE WRITTEN APPROVAL AND AUTHORITY OF DUFRESNE GROUP. ANY REVISIONS SHALL BE MADE BY DUFRESNE GROUP ©

NORTHFIELD STREET UTILITIES IMPROVEMENTS

8" SEWER MAIN
PLAN AND PROFILE
SMH 7 TO SMH 11

CITY OF MONTPELIER, VERMONT

Project #	8160003
Project Mgr.	R.E. DUFRESNE
Design by	B.L. BAKER
Drawn by	B.L. BAKER
Reviewed by	T.P. KNAPP
Approved by	R.E. DUFRESNE
Date	FEBRUARY 6, 2017
Scale	AS SHOWN

C2

FILE: R:\Montpelier VT\City of Montpelier\8160003 - Northfield Street Utilities\CAD\8160002 - Northfield Street Sewer Plans.dwg Feb 08, 2017 - 5:28pm

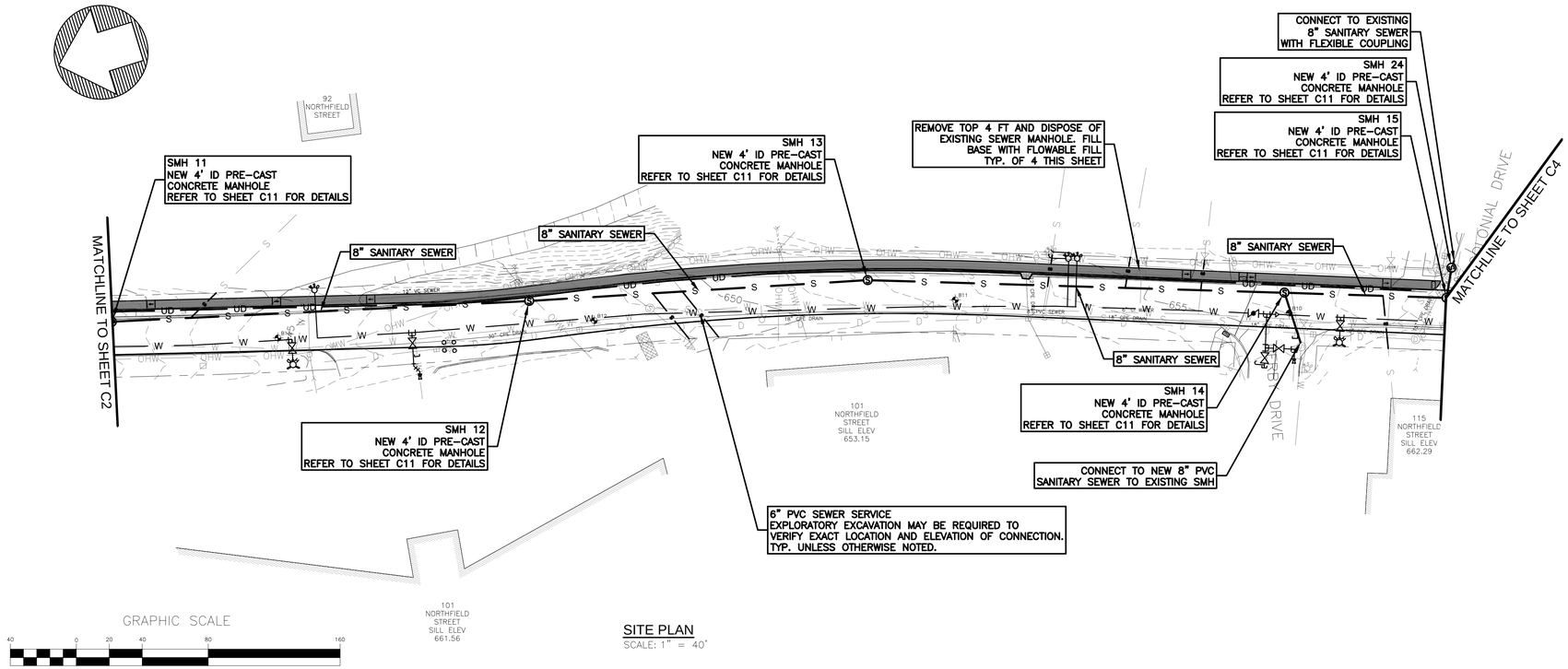

SITE PLAN
SCALE: 1" = 40'

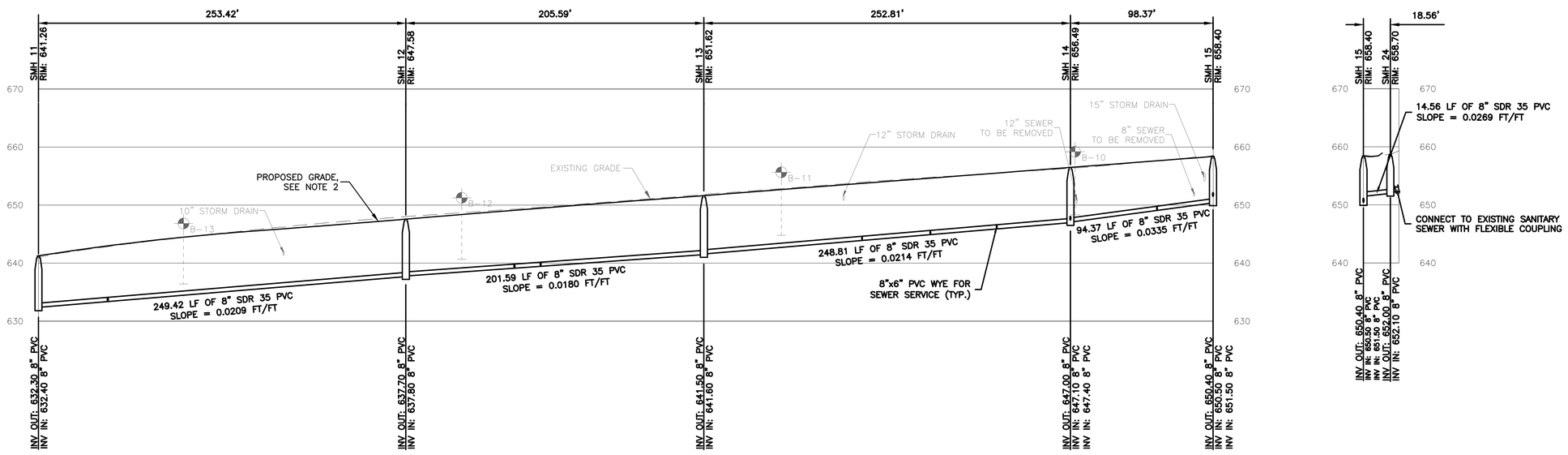

SEWER MAIN PROFILE
SCALE: H- 1" = 40'
V- 1" = 10'

NOTES:
1. SEE SHEET G1 FOR GENERAL NOTES, LEGEND, AND ABBREVIATIONS.
2. FINISH GRADE SHOWN IS BASED ON GRADE AFTER PAVING, BY OTHERS, IS COMPLETE. REFER TO ROAD PLANS, PROFILES, AND SECTIONS FOR ELEVATIONS DETAILS UNDER THIS CONTRACT.

FINAL DESIGN SUBMITTAL
NOT FOR CONSTRUCTION

DUFRESNE GROUP
CONSULTING ENGINEERS
56 Main Street, Suite 200
Springfield, Vermont 05156
E-mail: info@dufresnegroup.com
Web: www.dufresnegroup.com
Springfield, VT • Tel: (802) 674-2904 Fax: (802) 674-2913
Barre, VT • Tel: (802) 479-3698
St. Johnsbury, VT • Tel: (802) 748-8605
Manchester, VT • Tel: (802) 768-8291
Dufresne Group is owned by Dufresne & Associates, PC

STATE OF VERMONT
ROBERT E. DUFRESNE
NO. 3034
CIVIL
LICENSED PROFESSIONAL ENGINEER
2-6-17

REVISIONS

DATE	COMMENTS	BY

THIS DRAWING SHALL NOT BE REUSED OR ALTERED IN ANY WAY WITHOUT THE WRITTEN APPROVAL AND AUTHORITY OF DUFRESNE GROUP. ANY REVISIONS SHALL BE MADE BY DUFRESNE GROUP ©

NORTHFIELD STREET UTILITIES IMPROVEMENTS

8" SEWER MAIN
PLAN AND PROFILE
SMH 11 TO SMH 15

CITY OF MONTPELIER, VERMONT

Project #	8160003
Project Mgr.	R.E. DUFRESNE
Design by	B.L. BAKER
Drawn by	B.L. BAKER
Reviewed by	T.P. KNAPP
Approved by	R.E. DUFRESNE
Date	FEBRUARY 6, 2017
Scale	AS SHOWN

C3

FILE: R:\Montpelier V1\City of Montpelier\8160003 - Northfield Street Utilities\CAD\8160002 - Northfield Street Sewer Plans.dwg Feb 08, 2017 - 5:29pm

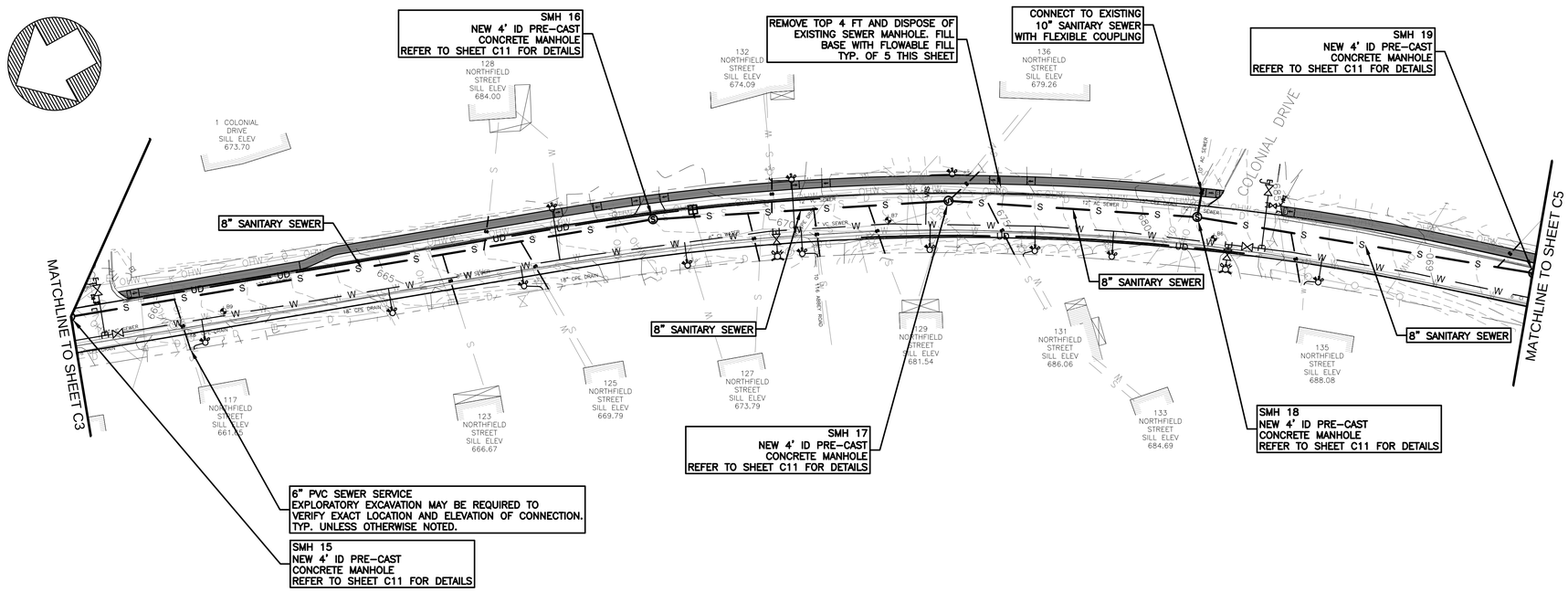

SITE PLAN
SCALE: 1" = 40'

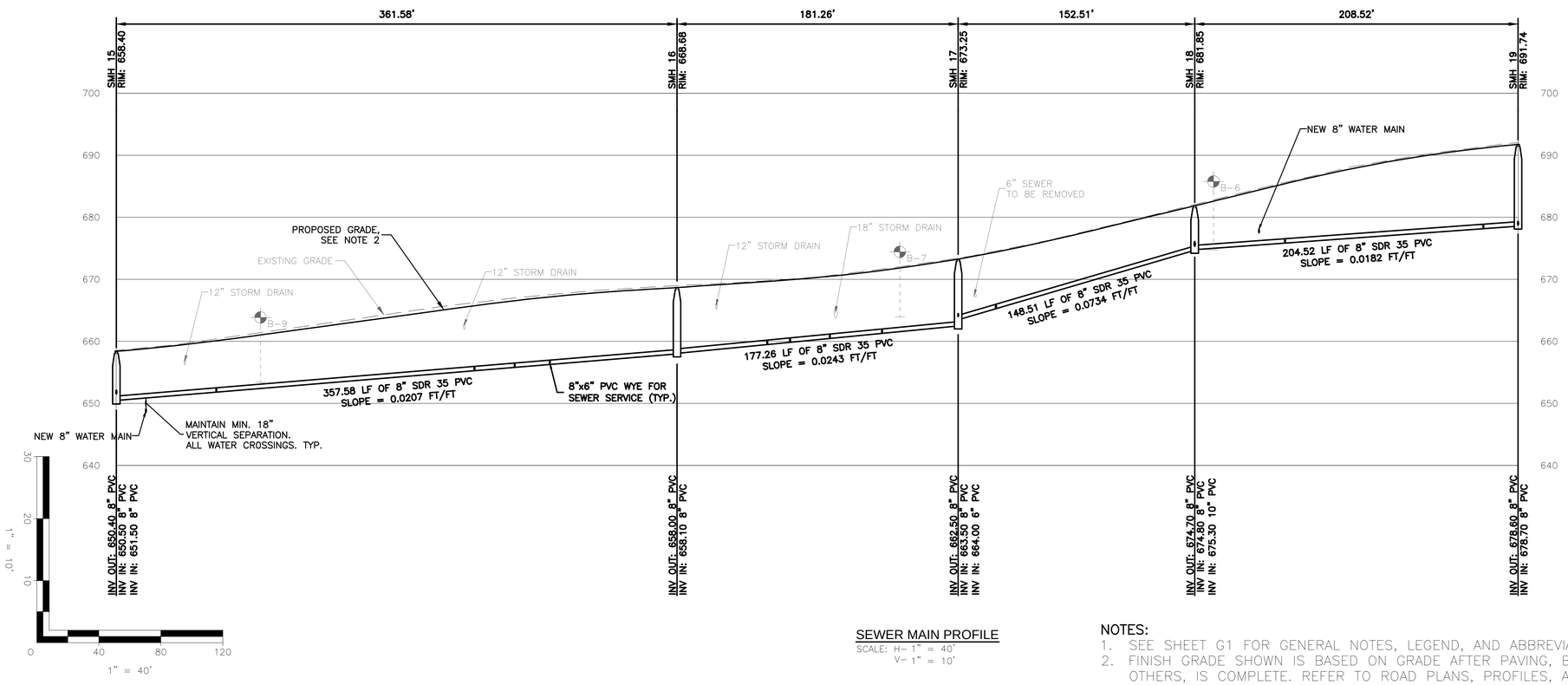

SEWER MAIN PROFILE
SCALE: H- 1" = 40'
V- 1" = 10'

NOTES:
1. SEE SHEET G1 FOR GENERAL NOTES, LEGEND, AND ABBREVIATIONS.
2. FINISH GRADE SHOWN IS BASED ON GRADE AFTER PAVING, BY OTHERS, IS COMPLETE. REFER TO ROAD PLANS, PROFILES, AND SECTIONS FOR ELEVATIONS DETAILS UNDER THIS CONTRACT.

FINAL DESIGN SUBMITTAL
NOT FOR CONSTRUCTION

DUFRESNE GROUP
CONSULTING ENGINEERS
56 Main Street, Suite 200
Springfield, Vermont 05156
E-mail: info@dufresnegroup.com
Web: www.dufresnegroup.com
• • •
Springfield, VT • Tel: (802) 674-2904 Fax: (802) 674-2913
Barre, VT • Tel: (802) 479-3698
St. Johnsbury, VT • Tel: (802) 748-8605
Manchester, VT • Tel: (802) 768-8291
• • •
Dufresne Group is owned by Dufresne & Associates, PC

STATE OF VERMONT
ROBERT E. DUFRESNE
NO. 3834
CIVIL
LICENSED PROFESSIONAL ENGINEER
2-6-17

REVISIONS

DATE	COMMENTS	BY

THIS DRAWING SHALL NOT BE REUSED OR ALTERED IN ANY WAY WITHOUT THE WRITTEN APPROVAL AND AUTHORITY OF DUFRESNE GROUP. ANY REVISIONS SHALL BE MADE BY DUFRESNE GROUP ©

NORTHFIELD STREET UTILITIES IMPROVEMENTS

8" SEWER MAIN
PLAN AND PROFILE
SMH 15 TO SMH 19

CITY OF MONTPELIER, VERMONT

Project #	8160003
Project Mgr.	R.E. DUFRESNE
Design by	B.L. BAKER
Drawn by	B.L. BAKER
Reviewed by	T.P. KNAPP
Approved by	R.E. DUFRESNE
Date	FEBRUARY 6, 2017
Scale	AS SHOWN

C4

FILE: R:\Montpelier VT\City of Montpelier\8160003 - Northfield Street Utilities\CAD\8160002 - Northfield Street Sewer Plans.dwg Feb 08, 2017 - 5:29pm

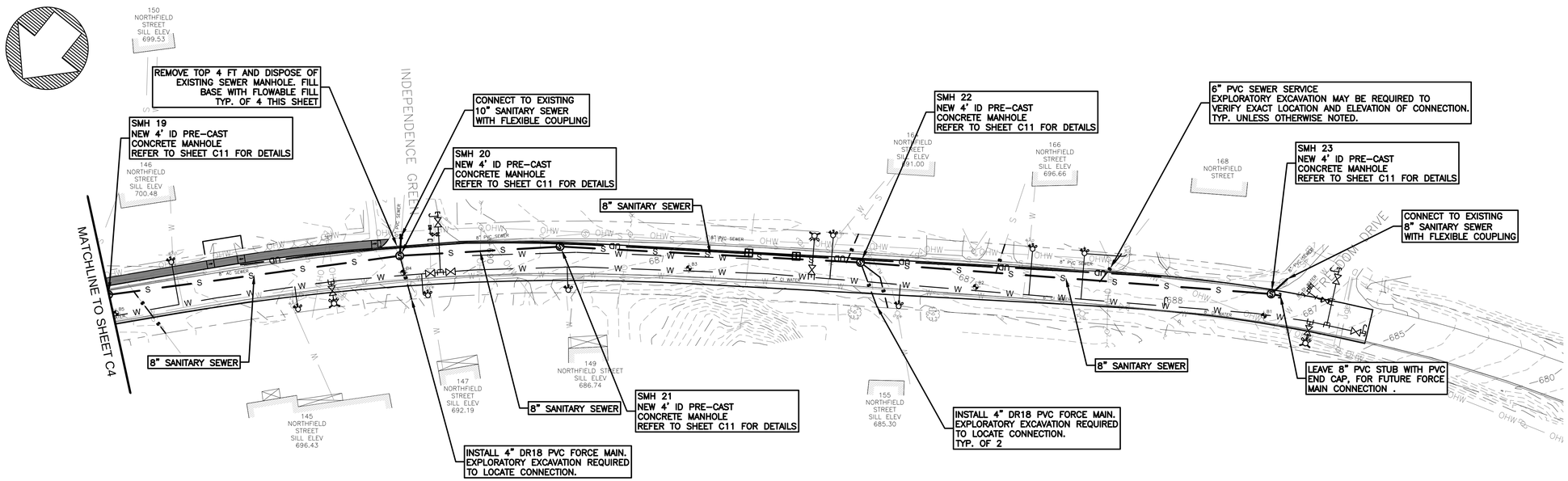

GRAPHIC SCALE

40 0 20 40 80 160

(IN FEET)

SITE PLAN

SCALE: 1" = 40'

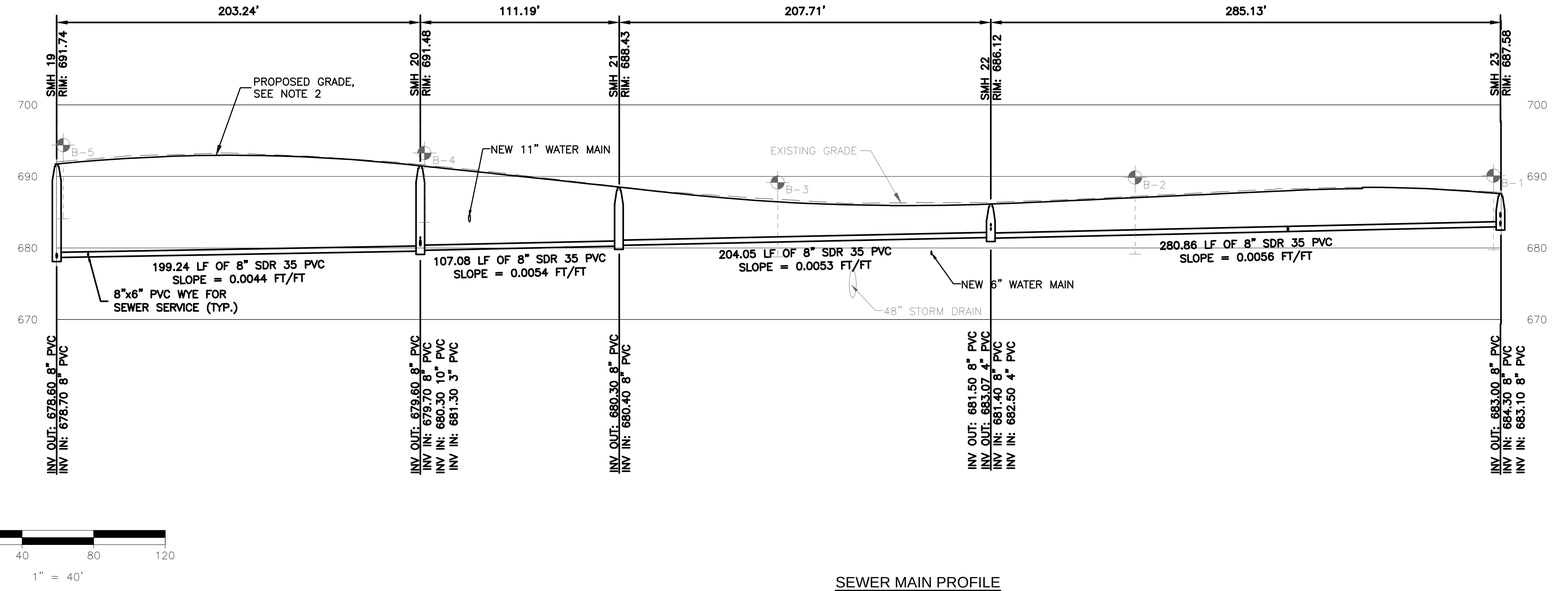

SEWER MAIN PROFILE

SCALE: H- 1" = 40'
V- 1" = 10'

NOTES:

1. SEE SHEET G1 FOR GENERAL NOTES, LEGEND, AND ABBREVIATIONS.
2. FINISH GRADE SHOWN IS BASED ON GRADE AFTER PAVING, BY OTHERS, IS COMPLETE. REFER TO ROAD PLANS, PROFILES, AND SECTIONS FOR ELEVATIONS DETAILS UNDER THIS CONTRACT.

FINAL DESIGN SUBMITTAL

NOT FOR CONSTRUCTION

DUFRESNE GROUP
CONSULTING ENGINEERS
56 Main Street, Suite 200
Springfield, Vermont 05156
E-mail: info@dufresnegroup.com
Web: www.dufresnegroup.com
Springfield, VT • Tel: (802) 674-2904 Fax: (802) 674-2913
Barre, VT • Tel: (802) 479-3698
St. Johnsbury, VT • Tel: (802) 748-8605
Manchester, VT • Tel: (802) 768-8291
Dufresne Group is owned by Dufresne & Associates, PC

STATE OF VERMONT ROBERT E. DUFRESNE NO. 3834 CIVIL LICENSED PROFESSIONAL ENGINEER

2-6-17

REVISIONS

DATE	COMMENTS	BY

THIS DRAWING SHALL NOT BE REUSED OR ALTERED IN ANY WAY WITHOUT THE WRITTEN APPROVAL AND AUTHORITY OF DUFRESNE GROUP. ANY REVISIONS SHALL BE MADE BY DUFRESNE GROUP ©

NORTHFIELD STREET UTILITIES IMPROVEMENTS

8" SEWER MAIN PLAN AND PROFILE SMH 19 TO SMH 23

CITY OF MONTPELIER, VERMONT

Project #	8160003
Project Mgr.	R.E. DUFRESNE
Design by	B.L. BAKER
Drawn by	B.L. BAKER
Reviewed by	T.P. KNAPP
Approved by	R.E. DUFRESNE
Date	FEBRUARY 6, 2017
Scale	AS SHOWN

C5

FILE: R:\Montpelier VT\City of Montpelier\8160003 - Northfield Street Utilities\CAD\8160002 - Northfield Street Sewer Plans.dwg Feb 08, 2017 - 5:29pm

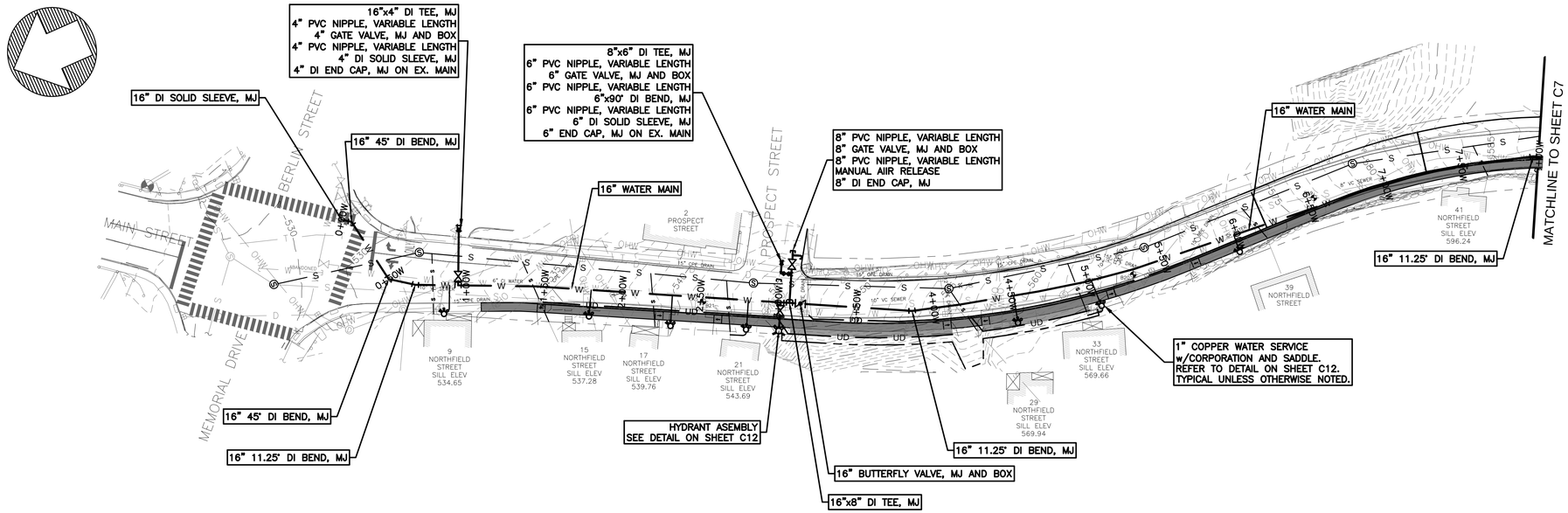

SITE PLAN
SCALE: 1" = 40'

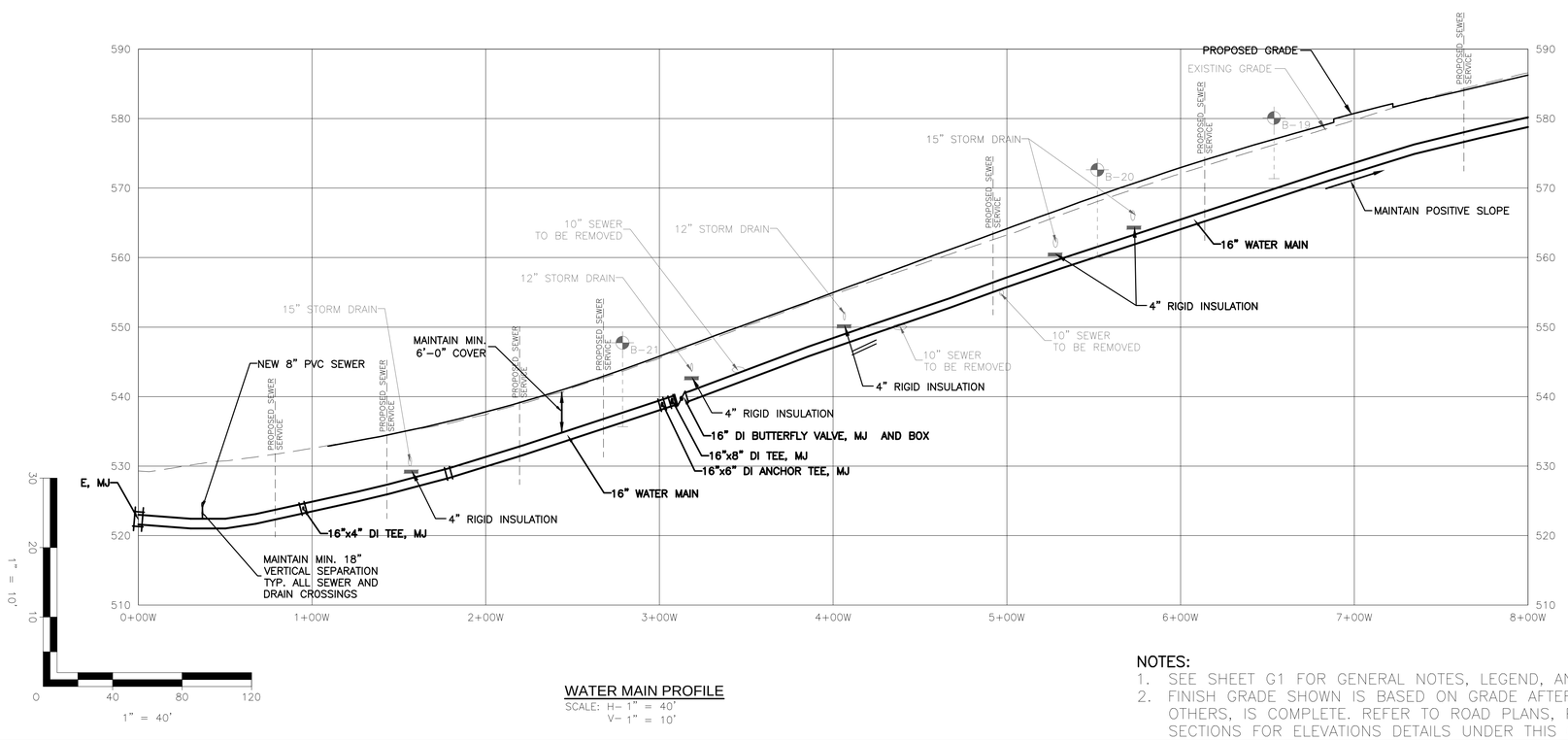

WATER MAIN PROFILE
SCALE: H- 1" = 40'
V- 1" = 10'

NOTES:
1. SEE SHEET G1 FOR GENERAL NOTES, LEGEND, AND ABBREVIATIONS.
2. FINISH GRADE SHOWN IS BASED ON GRADE AFTER PAVING, BY OTHERS, IS COMPLETE. REFER TO ROAD PLANS, PROFILES, AND SECTIONS FOR ELEVATIONS DETAILS UNDER THIS CONTRACT.

FINAL DESIGN SUBMITTAL
NOT FOR CONSTRUCTION

DUFRESNE GROUP
CONSULTING ENGINEERS
56 Main Street, Suite 200
Springfield, Vermont 05156
E-mail: info@dufresnegroup.com
Web: www.dufresnegroup.com
Springfield, VT • Tel: (802) 674-2904 Fax: (802) 674-2913
Barre, VT • Tel: (802) 479-3698
St. Johnsbury, VT • Tel: (802) 748-8605
Manchester, VT • Tel: (802) 768-8291
Dufresne Group is owned by Dufresne & Associates, PC

STATE OF VERMONT
ROBERT E. DUFRESNE
NO. 3834
CIVIL
LICENSED PROFESSIONAL ENGINEER
2-6-17

REVISIONS

DATE	COMMENTS	BY

THIS DRAWING SHALL NOT BE REUSED OR ALTERED IN ANY WAY WITHOUT THE WRITTEN APPROVAL AND AUTHORITY OF DUFRESNE GROUP. ANY REVISIONS SHALL BE MADE BY DUFRESNE GROUP ©

NORTHFIELD STREET UTILITIES IMPROVEMENTS

16" WATER MAIN
PLAN AND PROFILE
STATION 0+00W TO 8+00W

CITY OF MONTPELIER, VERMONT

Project #	8160003
Project Mgr.	R.E. DUFRESNE
Design by	B.L. BAKER
Drawn by	B.L. BAKER
Reviewed by	T.P. KNAPP
Approved by	R.E. DUFRESNE
Date	FEBRUARY 6, 2017
Scale	AS SHOWN

C6

FILE: R:\Montpelier VT\City of Montpelier\8160003 - Northfield Street Utilities\CAD\8160002 - Northfield Street Water Plans.dwg Feb 08, 2017 - 5:30pm

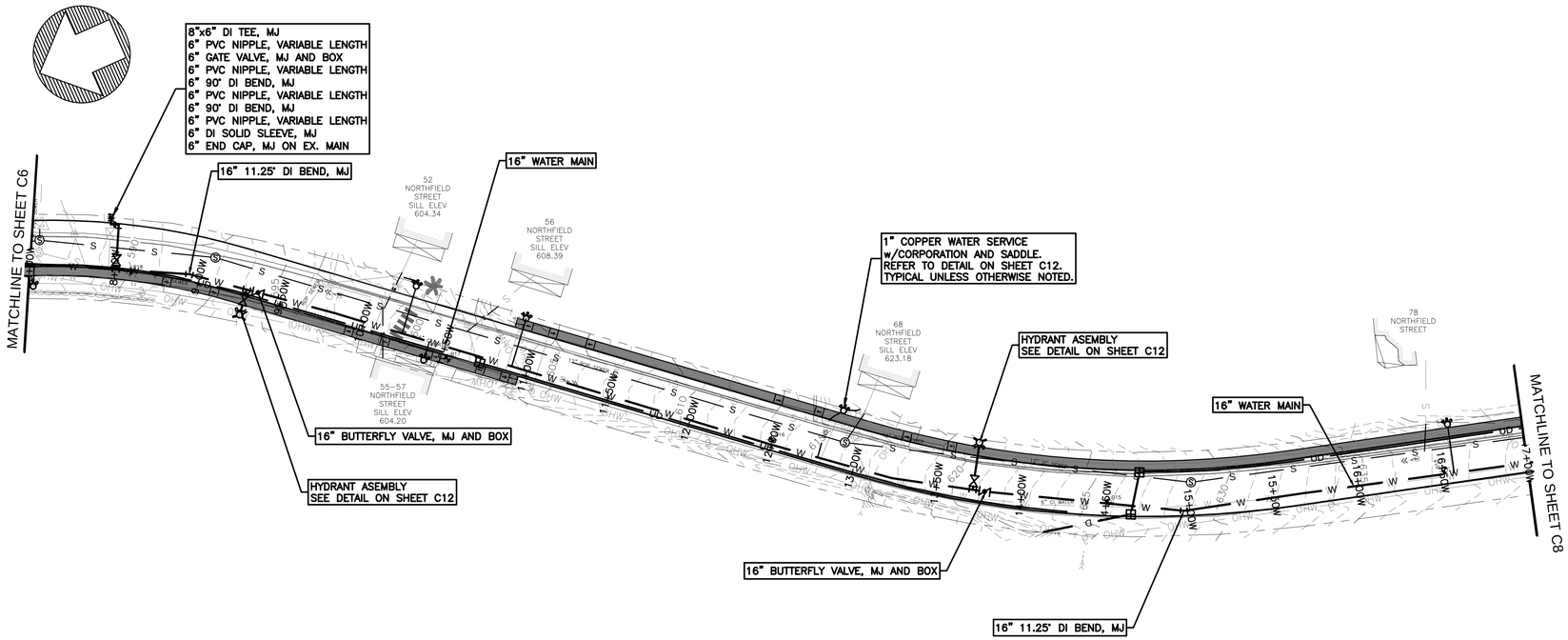

GRAPHIC SCALE

40 0 20 40 80 160

(IN FEET)

SITE PLAN

SCALE: 1" = 40'

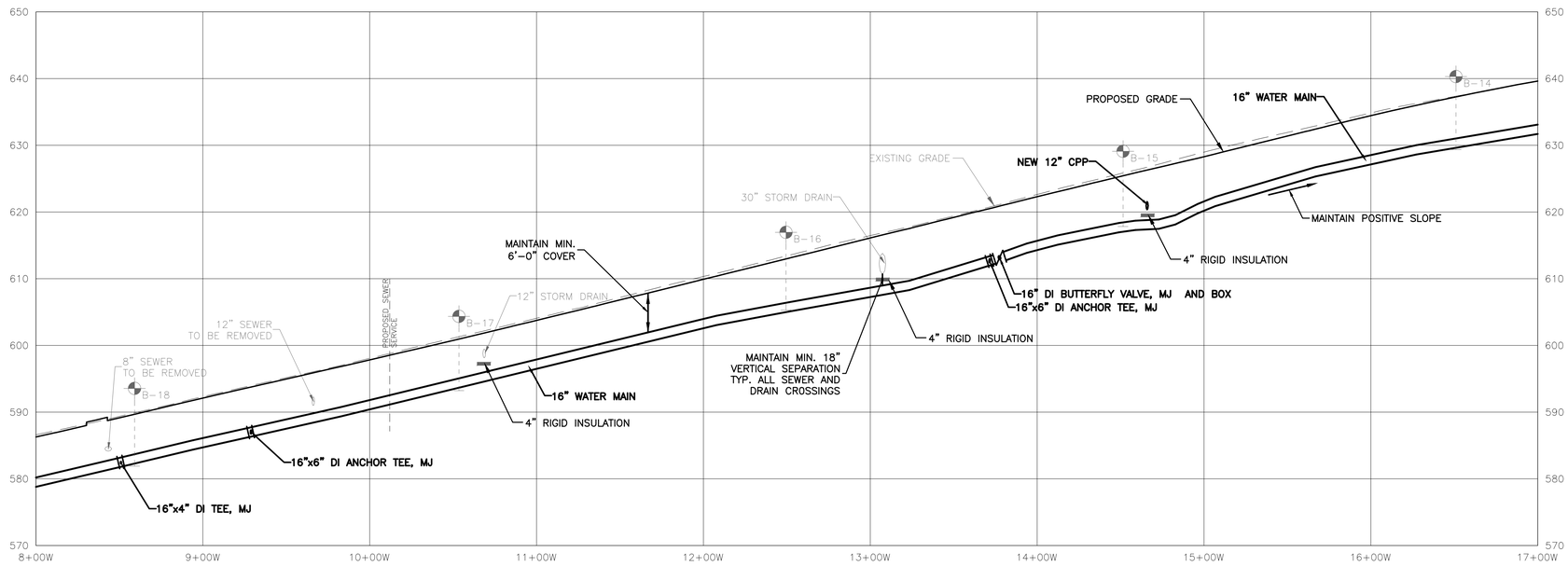

30 20 10 0 40 80 120

1" = 10'

1" = 40'

WATER MAIN PROFILE

SCALE: H- 1" = 40'
V- 1" = 10'

NOTES:

1. SEE SHEET G1 FOR GENERAL NOTES, LEGEND, AND ABBREVIATIONS.
2. FINISH GRADE SHOWN IS BASED ON GRADE AFTER PAVING, BY OTHERS, IS COMPLETE. REFER TO ROAD PLANS, PROFILES, AND SECTIONS FOR ELEVATIONS DETAILS UNDER THIS CONTRACT.

FINAL DESIGN SUBMITTAL

NOT FOR CONSTRUCTION

DUFRESNE GROUP
CONSULTING ENGINEERS
56 Main Street, Suite 200
Springfield, Vermont 05156
E-mail: info@dufresnegroup.com
Web: www.dufresnegroup.com

Springfield, VT • Tel: (802) 674-2904 Fax: (802) 674-2913
Barre, VT • Tel: (802) 479-3698
St. Johnsbury, VT • Tel: (802) 748-8605
Manchester, VT • Tel: (802) 768-8291

Dufresne Group is owned by Dufresne & Associates, PC

STATE OF VERMONT ROBERT E. DUFRESNE NO. 3834 CIVIL LICENSED PROFESSIONAL ENGINEER

2-6-17

REVISIONS

DATE	COMMENTS	BY

THIS DRAWING SHALL NOT BE REUSED OR ALTERED IN ANY WAY WITHOUT THE WRITTEN APPROVAL AND AUTHORITY OF DUFRESNE GROUP. ANY REVISIONS SHALL BE MADE BY DUFRESNE GROUP ©

NORTHFIELD STREET UTILITIES IMPROVEMENTS

16" WATER MAIN
PLAN AND PROFILE
STATION 8+00W TO 17+00W

CITY OF MONTPELIER, VERMONT

Project #	8160003
Project Mgr.	R.E. DUFRESNE
Design by	B.L. BAKER
Drawn by	B.L. BAKER
Reviewed by	T.P. KNAPP
Approved by	R.E. DUFRESNE
Date	FEBRUARY 6, 2017
Scale	AS SHOWN

C7

FILE: R:\Montpelier VT\City of Montpelier\8160003 - Northfield Street Utilities\CAD\8160002 - Northfield Street Water Plans.dwg Feb 08, 2017 - 5:35pm

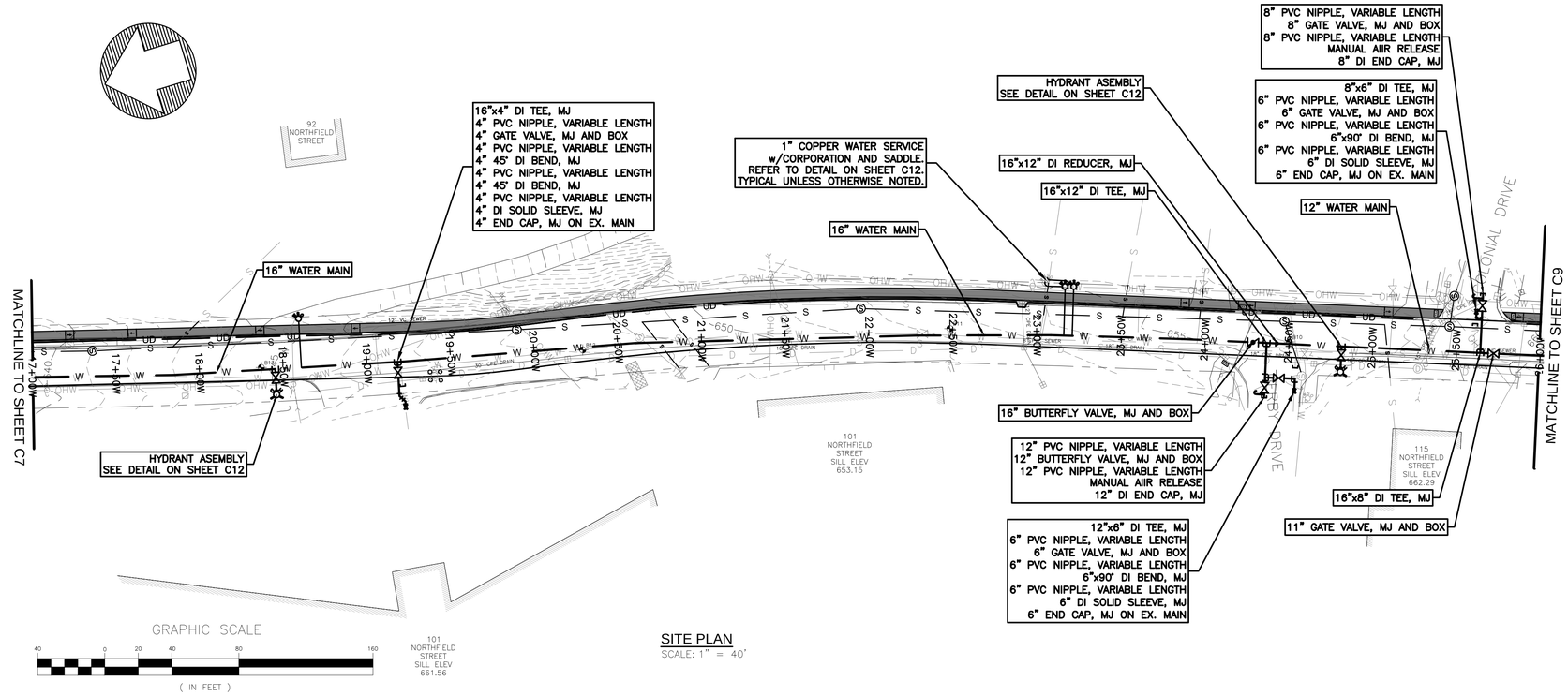

SITE PLAN
SCALE: 1" = 40'

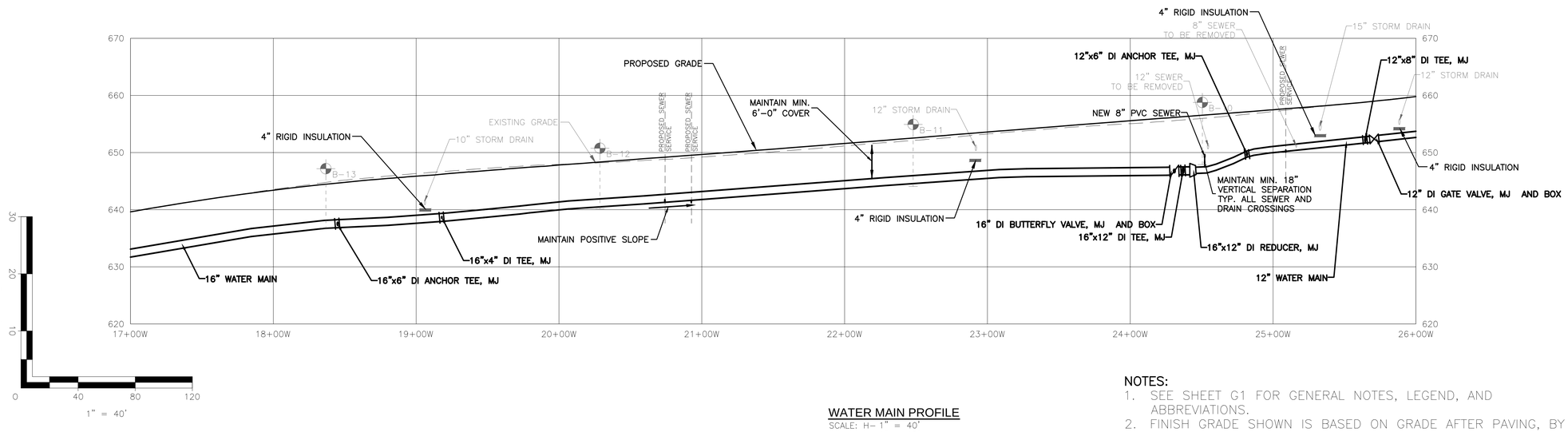

WATER MAIN PROFILE
SCALE: H- 1" = 40'
V- 1" = 10'

NOTES:
1. SEE SHEET G1 FOR GENERAL NOTES, LEGEND, AND ABBREVIATIONS.
2. FINISH GRADE SHOWN IS BASED ON GRADE AFTER PAVING, BY OTHERS, IS COMPLETE. REFER TO ROAD PLANS, PROFILES, AND SECTIONS FOR ELEVATIONS DETAILS UNDER THIS CONTRACT.

FINAL DESIGN SUBMITTAL
NOT FOR CONSTRUCTION

DUFRESNE GROUP
CONSULTING ENGINEERS
56 Main Street, Suite 200
Springfield, Vermont 05156
E-mail: info@dufresnegroup.com
Web: www.dufresnegroup.com
Springfield, VT • Tel: (802) 674-2904 Fax: (802) 674-2913
Barre, VT • Tel: (802) 479-3698
St. Johnsbury, VT • Tel: (802) 748-8605
Manchester, VT • Tel: (802) 768-8291
Dufresne Group is owned by Dufresne & Associates, PC

STATE OF VERMONT
ROBERT E. DUFRESNE
NO. 3834
CIVIL
LICENSED PROFESSIONAL ENGINEER
2-6-17

REVISIONS

DATE	COMMENTS	BY

THIS DRAWING SHALL NOT BE REUSED OR ALTERED IN ANY WAY WITHOUT THE WRITTEN APPROVAL AND AUTHORITY OF DUFRESNE GROUP. ANY REVISIONS SHALL BE MADE BY DUFRESNE GROUP ©

NORTHFIELD STREET UTILITIES IMPROVEMENTS

16" WATER MAIN PLAN AND PROFILE STATION 17+00W TO 26+00W

CITY OF MONTPELIER, VERMONT

Project #	8160003
Project Mgr.	R.E. DUFRESNE
Design by	B.L. BAKER
Drawn by	B.L. BAKER
Reviewed by	T.P. KNAPP
Approved by	R.E. DUFRESNE
Date	FEBRUARY 6, 2017
Scale	AS SHOWN

C8

FILE: R:\Montpelier VT\City of Montpelier\8160003 - Northfield Street Utilities\CAD\8160002 - Northfield Street Water Plans.dwg Feb 08, 2017 - 5:31pm

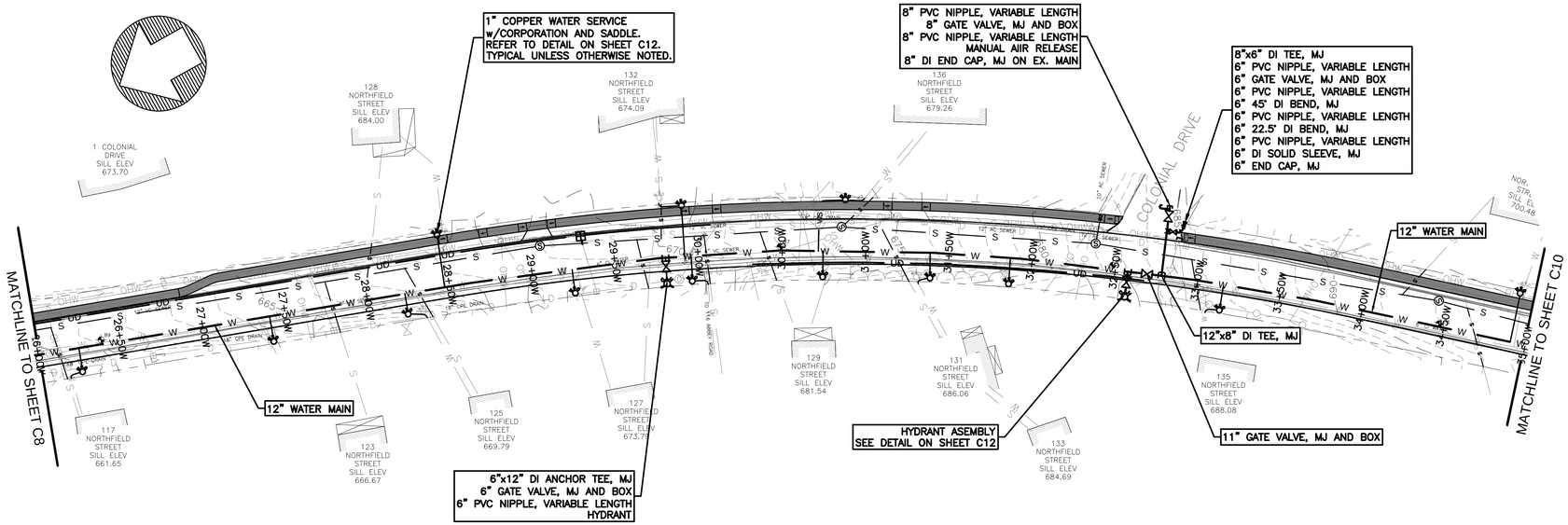

GRAPHIC SCALE

40 0 20 40 80 160

(IN FEET)

SITE PLAN

SCALE: 1" = 40'

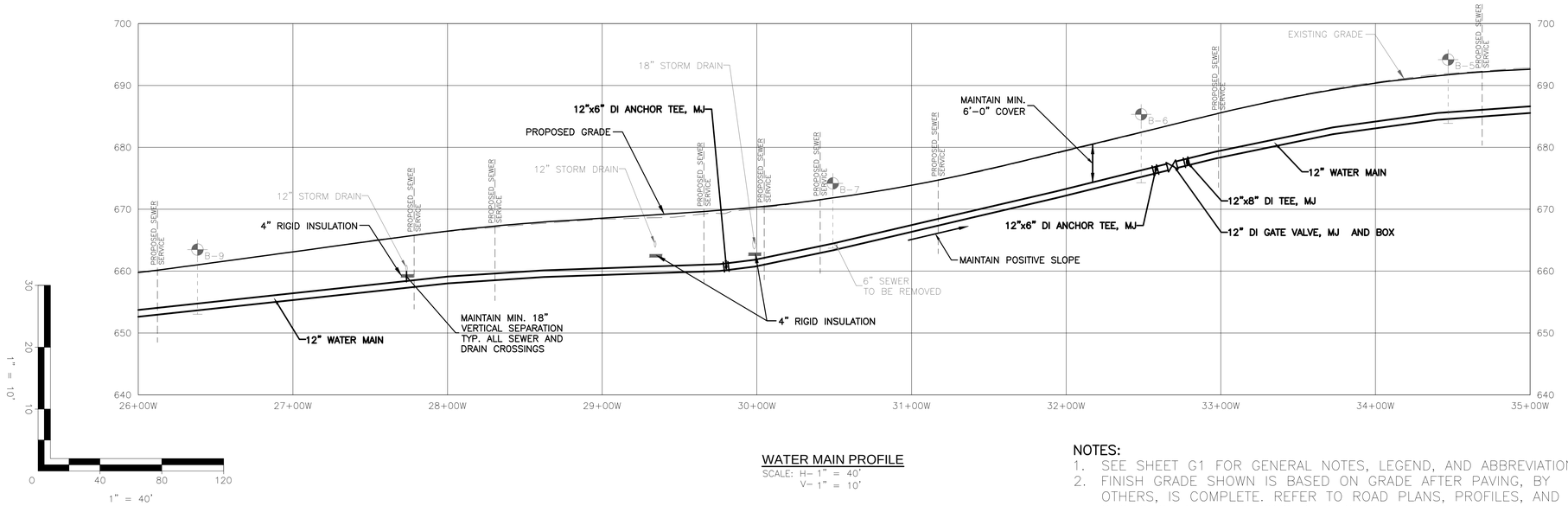

1" = 10'

0 40 80 120

1" = 40'

WATER MAIN PROFILE

SCALE: H- 1" = 40'
V- 1" = 10'

NOTES:

1. SEE SHEET G1 FOR GENERAL NOTES, LEGEND, AND ABBREVIATIONS.
2. FINISH GRADE SHOWN IS BASED ON GRADE AFTER PAVING, BY OTHERS, IS COMPLETE. REFER TO ROAD PLANS, PROFILES, AND SECTIONS FOR ELEVATIONS DETAILS UNDER THIS CONTRACT.

FINAL DESIGN SUBMITTAL

NOT FOR CONSTRUCTION

DUFRESNE GROUP
CONSULTING ENGINEERS
56 Main Street, Suite 200
Springfield, Vermont 05156
E-mail: info@dufresnegroup.com
Web: www.dufresnegroup.com
• • •
Springfield, VT • Tel: (802) 674-2904 Fax: (802) 674-2913
Barre, VT • Tel: (802) 479-3698
St. Johnsbury, VT • Tel: (802) 748-8605
Manchester, VT • Tel: (802) 768-8291
• • •
Dufresne Group is owned by Dufresne & Associates, PC

STATE OF VERMONT
ROBERT E. DUFRESNE
NO. 3834
CIVIL
LICENSED PROFESSIONAL ENGINEER

2-6-17

REVISIONS

DATE	COMMENTS	BY

THIS DRAWING SHALL NOT BE REUSED OR ALTERED IN ANY WAY WITHOUT THE WRITTEN APPROVAL AND AUTHORITY OF DUFRESNE GROUP. ANY REVISIONS SHALL BE MADE BY DUFRESNE GROUP ©

NORTHFIELD STREET UTILITIES IMPROVEMENTS

12" WATER MAIN
PLAN AND PROFILE
STATION 26+00W TO 35+00W

CITY OF MONTPELIER, VERMONT

Project #	8160003
Project Mgr.	R.E. DUFRESNE
Design by	B.L. BAKER
Drawn by	B.L. BAKER
Reviewed by	T.P. KNAPP
Approved by	R.E. DUFRESNE
Date	FEBRUARY 6, 2017
Scale	AS SHOWN

C9

FILE: R:\Montpelier V1\City of Montpelier\8160003 - Northfield Street Utilities\CAD\8160002 - Northfield Street Water Plans.dwg Feb 08, 2017 - 5:31pm

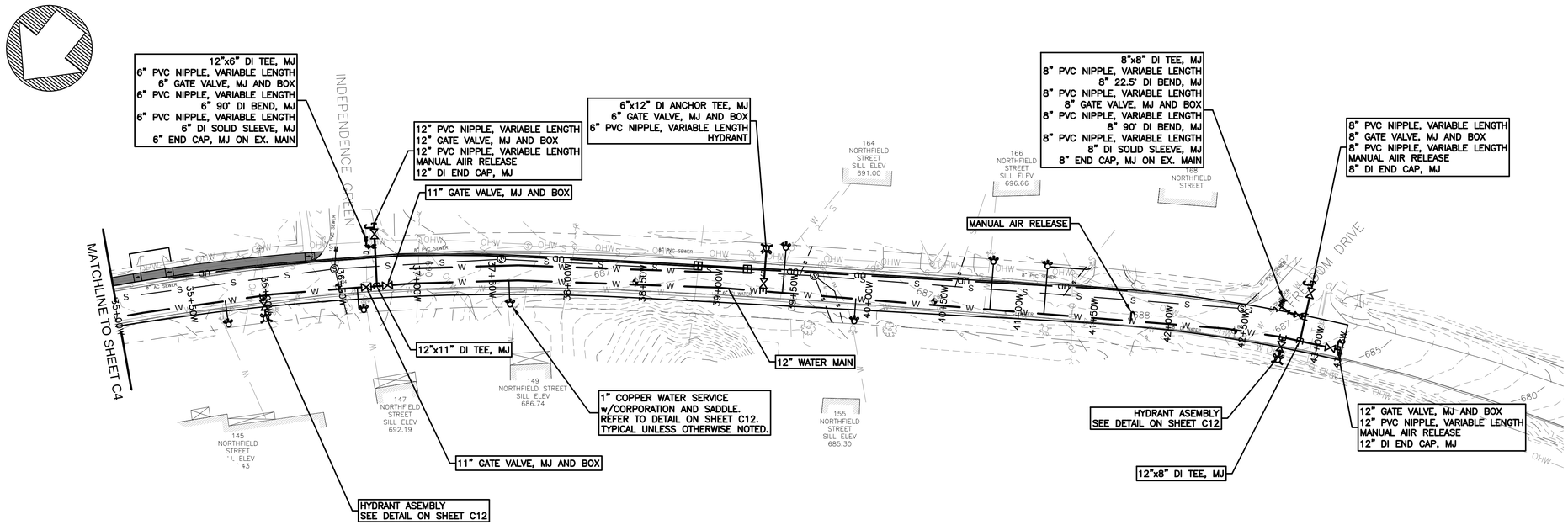

SITE PLAN
SCALE: 1" = 40'

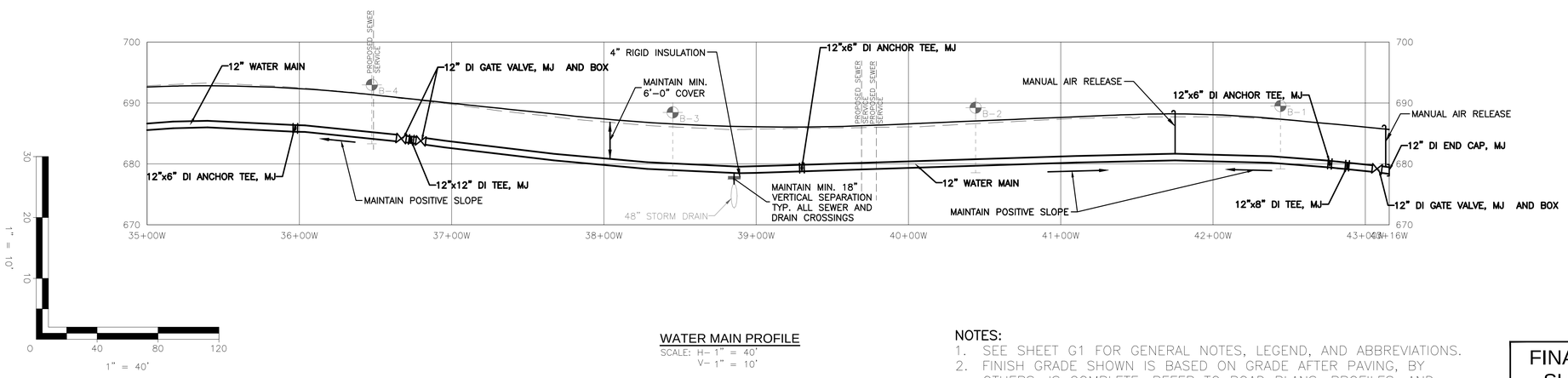

WATER MAIN PROFILE
SCALE: H- 1" = 40'
V- 1" = 10'

NOTES:
1. SEE SHEET G1 FOR GENERAL NOTES, LEGEND, AND ABBREVIATIONS.
2. FINISH GRADE SHOWN IS BASED ON GRADE AFTER PAVING, BY OTHERS, IS COMPLETE. REFER TO ROAD PLANS, PROFILES, AND SECTIONS FOR ELEVATIONS DETAILS UNDER THIS CONTRACT.

FINAL DESIGN SUBMITTAL
NOT FOR CONSTRUCTION

DUFRESNE GROUP
CONSULTING ENGINEERS
56 Main Street, Suite 200
Springfield, Vermont 05156
E-mail: info@dufresnegroup.com
Web: www.dufresnegroup.com
Springfield, VT • Tel: (802) 674-2904 Fax: (802) 674-2913
Barre, VT • Tel: (802) 479-3698
St. Johnsbury, VT • Tel: (802) 748-8605
Manchester, VT • Tel: (802) 768-8291
Dufresne Group is owned by Dufresne & Associates, PC

STATE OF VERMONT
ROBERT E. DUFRESNE
NO. 3834
CIVIL
LICENSED PROFESSIONAL ENGINEER
2-6-17

REVISIONS

DATE	COMMENTS	BY

THIS DRAWING SHALL NOT BE REUSED OR ALTERED IN ANY WAY WITHOUT THE WRITTEN APPROVAL AND AUTHORITY OF DUFRESNE GROUP. ANY REVISIONS SHALL BE MADE BY DUFRESNE GROUP ©

NORTHFIELD STREET UTILITIES IMPROVEMENTS

12" WATER MAIN PLAN AND PROFILE STATION 35+00W TO 43+16W

CITY OF MONTPELIER, VERMONT

Project #	8160003
Project Mgr.	R.E. DUFRESNE
Design by	B.L. BAKER
Drawn by	B.L. BAKER
Reviewed by	T.P. KNAPP
Approved by	R.E. DUFRESNE
Date	FEBRUARY 6, 2017
Scale	AS SHOWN

C10

FILE: R:\Montpelier VT\City of Montpelier\8160003 - Northfield Street Utilities\CAD\8160002 - Northfield Street Water Plans.dwg Feb 08, 2017 - 5:31pm

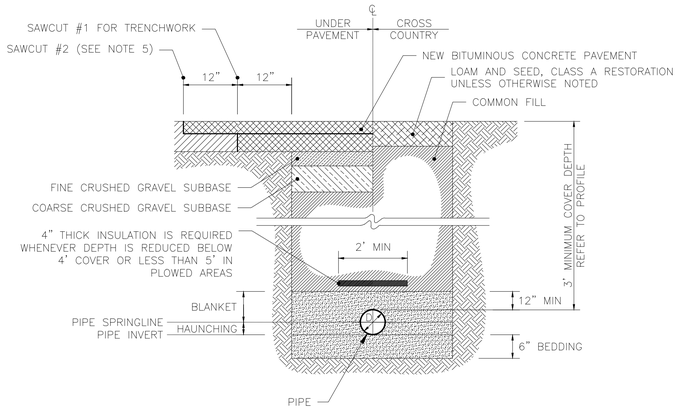

SANITARY SEWER MAIN TYPICAL TRENCH DETAIL

NOT TO SCALE

NOTES:

1. TYPICAL TRENCH DETAILS SHOWN HEREIN ARE BASED ON THE USE OF PVC OR HDPE PIPE.
2. REFER TO SPECIFICATIONS FOR PAVEMENT THICKNESS REQUIREMENTS.
3. REFER TO THE SPECIFICATIONS FOR COMPACTION, PAY LIMITS, AND SPECIALTY MATERIALS FOR BLANKET, HAUNCHING, BEDDING, AND GRAVELS.
4. NORMALLY, EXCAVATED MATERIAL FROM THE TRENCH CAN BE USED AS COMMON FILL BACKFILL AND COMPACTED AS NECESSARY TO ACHIEVE COMPLIANCE WITH THE SPECIFICATIONS. IF IN THE OPINION OF THE ENGINEER, THE EXCAVATED MATERIAL WHEN REMOVED IS TOO WET TO BE USED AS BACKFILL TO ACHIEVE THE MINIMUM SPECIFIED COMPACTION, MATERIAL MEETING THE COMMON FILL SPECIFICATION WILL BE FURNISHED AND INSTALLED AT THE UNIT PRICE PROVIDED.
5. IF THE EXCAVATED MATERIAL BECOMES TOO WET DUE TO WEATHER CONDITIONS OR DUE TO IMPROPER HANDLING PROCEDURES AND CANNOT BE REUSED FOR BACKFILL, THE MATERIAL SHALL BE SUFFICIENTLY DRIED OR MIXED WITH DRY MATERIAL TO OBTAIN PROPER MOISTURE CONTENT AT NO ADDITIONAL CHARGE TO THE OWNER.
6. SAWCUT #2 FOR PERMANENT TRENCH PAVEMENT: CUT EXISTING PAVEMENT IN A STRAIGHT LINE TO A DEPTH EQUAL TO NEW WEARING COURSE PAVEMENT THICKNESS AND REMOVE EXISTING PAVEMENT. CLEAN SURFACES AND TACK COAT ALL EDGES OF EXISTING PAVEMENT.
7. TRENCH WIDTH SHALL BE SUFFICIENT TO ALLOW PIPE TO BE LAID AND JOINED PROPERLY AND FOR PLACEMENT AND COMPACTION OF BEDDING. TRENCH SUPPORT SHALL BE ADEQUATE TO PERMIT SAFE ACCESS BY INSPECTOR FOR COMPACTION SAMPLES.
8. WHERE PIPE IS INSTALLED IN GRAVEL SHOULDER OR IN GRAVELED ROAD, GRAVEL SUBBASE MATERIAL AND COMPACTION SHALL BE AS SPECIFIED.

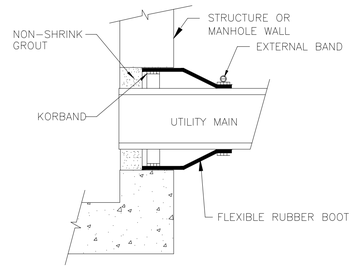

PIPE TO STRUCTURE OR MANHOLE JOINT DETAIL

NOT TO SCALE

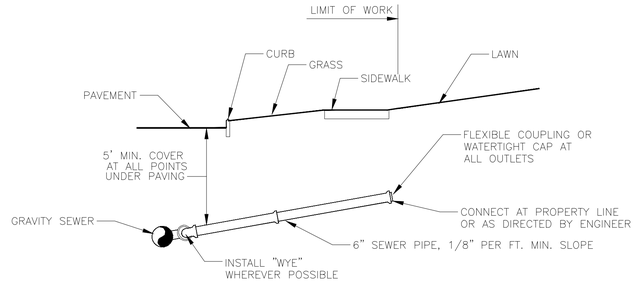

TYPICAL BUILDING SEWER SERVICE LATERALS

NOT TO SCALE

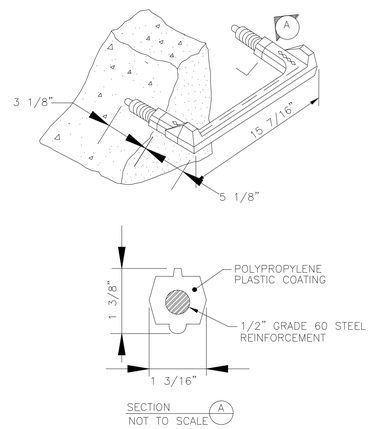

MANHOLE STEP DETAIL

NOT TO SCALE

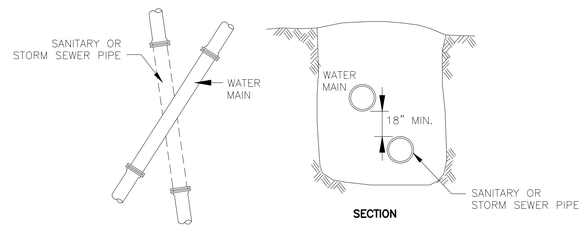

NOTES:

1. PARALLEL INSTALLATION: WATER MAINS SHALL BE LAID AT LEAST 10 FEET HORIZONTALLY FROM ANY EXISTING OR PROPOSED MANHOLE OR SANITARY SEWER. THIS DISTANCE CAN BE REDUCED TO 5 FEET FOR STORM SEWERS. THE DISTANCE SHALL BE MEASURED EDGE TO EDGE.
2. CROSSINGS: WATER MAINS CROSSING SEWERS SHALL BE LAID TO PROVIDE A MINIMUM VERTICAL DISTANCE OF 18 INCHES BETWEEN THE OUTSIDE OF THE WATER MAIN AND THE OUTSIDE OF THE SANITARY OR STORM SEWER. THIS SHALL BE THE CASE WHERE THE WATER MAIN IS EITHER ABOVE OR BELOW THE SEWER. AT CROSSINGS, ONE FULL LENGTH OF WATER PIPE SHALL BE LOCATED SO BOTH JOINTS WILL BE AS FAR FROM THE SEWER AS POSSIBLE. IF THE SEWER MAIN IS OVER THE WATER MAIN, THE FIRST SEWER PIPE JOINTS ON EACH SIDE OF THE WATER MAIN MUST BE CONCRETE ENCASED. SPECIAL STRUCTURAL SUPPORT FOR THE WATER AND SEWER PIPES MAY BE REQUIRED. WATER MAINS SHALL NOT PASS THROUGH SEWER MANHOLES OR BE SUBMERGED IN BASINS CONTAINING SEWAGE OR OTHER GROSSLY CONTAMINATED OR HAZARDOUS MATERIAL.
3. EXCEPTION: THE ENGINEER MUST SPECIFICALLY APPROVE ANY VARIANCE FROM THESE REQUIREMENTS WHEN IT IS IMPOSSIBLE TO OBTAIN THE SPECIFIED SEPARATION DISTANCES.
4. BELL JOINT CLAMPS ON THE PUSH-ON JOINTS OF DUCTILE IRON WATER MAIN SHALL BE UTILIZED IN LOCATIONS WHERE THE MINIMUM SEPARATION REQUIREMENTS CANNOT BE MET. ENGINEER MUST BE NOTIFIED AND APPROVE OF EACH INDIVIDUAL USE PRIOR TO INSTALLATION.

SANITARY AND/OR STORM SEWER PIPE AND WATER MAIN CROSSING DETAIL

NOT TO SCALE

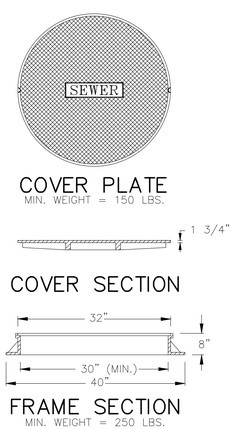

MANHOLE FRAME AND COVER DETAIL

NOT TO SCALE

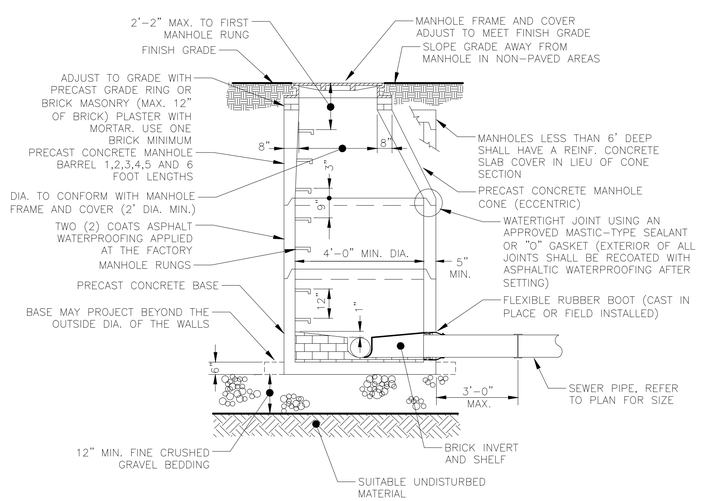

PRECAST CONCRETE MANHOLE

NOT TO SCALE

NOTES:
1. MANHOLE STRUCTURES SHALL BE RATED FOR AASHTO HC-93 WITHOUT FAILURE.

FINAL DESIGN SUBMITTAL
NOT FOR CONSTRUCTION

DUFRESNE GROUP
CONSULTING ENGINEERS
56 Main Street, Suite 200
Springfield, Vermont 05156
E-mail: info@dufresnegroup.com
Web: www.dufresnegroup.com
Springfield, VT • Tel: (802) 674-2904 Fax: (802) 674-2913
Barre, VT • Tel: (802) 479-3698
St. Johnsbury, VT • Tel: (802) 748-8605
Manchester, VT • Tel: (802) 768-8291
Dufresne Group is owned by Dufresne & Associates, PC

STATE OF VERMONT · ROBERT E. DUFRESNE · NO. 3834 · CIVIL · LICENSED PROFESSIONAL ENGINEER

2-6-17

REVISIONS

DATE	COMMENTS	BY

THIS DRAWING SHALL NOT BE REUSED OR ALTERED IN ANY WAY WITHOUT THE WRITTEN APPROVAL AND AUTHORITY OF DUFRESNE GROUP. ANY REVISIONS SHALL BE MADE BY DUFRESNE GROUP ©

NORTHFIELD STREET UTILITIES IMPROVEMENTS

STANDARD SEWER DETAILS

CITY OF MONTPELIER, VERMONT

Project #	8160003
Project Mgr.	R.E. DUFRESNE
Design by	B.L. BAKER
Drawn by	B.L. BAKER
Reviewed by	T.P. KNAPP
Approved by	R.E. DUFRESNE
Date	FEBRUARY 6, 2017
Scale	AS SHOWN

C11

FILE: R:\Montpelier VT\City of Montpelier\8160003 - Northfield Street Utilities\CAD\8160002 - Northfield Street Details.dwg Feb 08, 2017 - 5:31pm

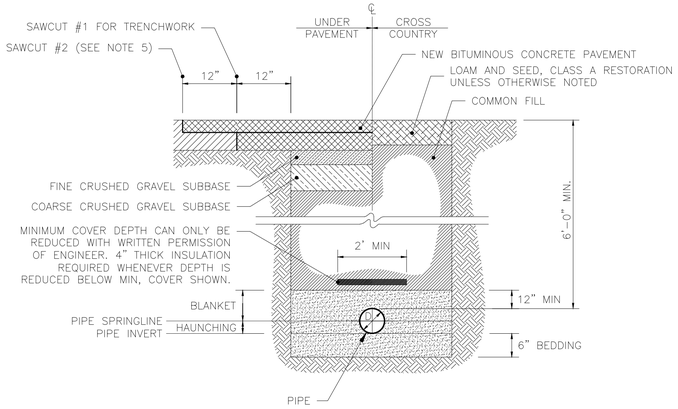

WATER MAIN TYPICAL TRENCH DETAIL

NOT TO SCALE

NOTES:
1. TYPICAL TRENCH DETAILS SHOWN HEREIN ARE BASED ON THE USE OF PVC OR HDPE PIPE.
2. REFER TO SPECIFICATIONS FOR PAVEMENT THICKNESS REQUIREMENTS.
3. REFER TO THE SPECIFICATIONS FOR COMPACTION, PAY LIMITS, AND SPECIALTY MATERIALS FOR BLANKET, HAUNCHING, BEDDING, AND GRAVELS.
4. NORMALLY, EXCAVATED MATERIAL FROM THE TRENCH CAN BE USED AS COMMON FILL BACKFILL AND COMPACTED AS NECESSARY TO ACHIEVE COMPLIANCE WITH THE SPECIFICATIONS. IF IN THE OPINION OF THE ENGINEER, THE EXCAVATED MATERIAL WHEN REMOVED IS TOO WET TO BE USED AS BACKFILL TO ACHIEVE THE MINIMUM SPECIFIED COMPACTION, MATERIAL MEETING THE COMMON FILL SPECIFICATION WILL BE FURNISHED AND INSTALLED AT THE UNIT PRICE PROVIDED.
5. IF THE EXCAVATED MATERIAL BECOMES TOO WET DUE TO WEATHER CONDITIONS OR DUE TO IMPROPER HANDLING PROCEDURES AND CANNOT BE REUSED FOR BACKFILL, THE MATERIAL SHALL BE SUFFICIENTLY DRIED OR MIXED WITH DRY MATERIAL TO OBTAIN PROPER MOISTURE CONTENT AT NO ADDITIONAL CHARGE TO THE OWNER.
6. SAWCUT #2 FOR PERMANENT TRENCH PAVEMENT: CUT EXISTING PAVEMENT IN A STRAIGHT LINE TO A DEPTH EQUAL TO NEW WEARING COURSE PAVEMENT THICKNESS AND REMOVE EXISTING PAVEMENT. CLEAN SURFACES AND TACK COAT ALL EDGES OF EXISTING PAVEMENT.
7. TRENCH WIDTH SHALL BE SUFFICIENT TO ALLOW PIPE TO BE LAID AND JOINED PROPERLY AND FOR PLACEMENT AND COMPACTION OF BEDDING. TRENCH SUPPORT SHALL BE ADEQUATE TO PERMIT SAFE ACCESS BY INSPECTOR FOR COMPACTION SAMPLES.
8. WHERE PIPE IS INSTALLED IN GRAVEL SHOULDER OR IN GRAVELED ROAD, GRAVEL SUBBASE MATERIAL AND COMPACTION SHALL BE AS SPECIFIED.

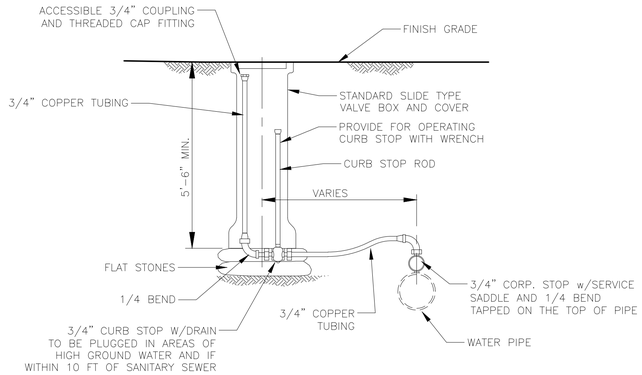

TYPICAL INSTALLATION-TRAVEL WAY FOR AIR VENT OR CHLORINATION INJECTION

NOT TO SCALE

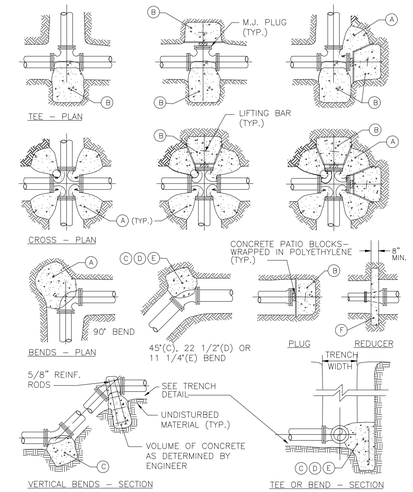

THRUST BLOCK SCHEDULE
SQUARE FEET OF CONCRETE THRUST
BLOCKING BEARING ON UNDISTURBED MATERIAL

REACTION TYPE		PIPE SIZE 4"	6"	8"	10"	12"	14"	16"	18"	20"	24"
TEST PRESSURE = 200 PSIG	Ⓐ	5.12	10.58	18.19	27.37	38.71	52.00	67.26	84.47	103.64	147.87
	Ⓑ	3.62	7.48	12.87	19.35	27.37	36.77	47.56	59.73	73.29	104.56
	Ⓒ	2.77	5.72	9.85	14.81	20.95	28.14	36.40	45.72	56.09	80.03
	Ⓓ	1.41	2.92	5.02	7.55	10.68	14.35	18.56	23.31	28.60	40.80
	Ⓔ	0.71	1.47	2.52	3.79	5.37	7.21	9.32	11.71	14.37	20.50
	Ⓕ	–	3.86	9.25	15.73	23.75	29.29	40.08	46.86	53.93	77.19

NOTES:
1. THRUST RESTRAINT IS REQUIRED FOR ALL TEES, BENDS, REDUCERS, CAPS, PLUGS, OR CROSSES.
2. POUR THRUST BLOCKS AGAINST UNDISTURBED MATERIAL. WHERE TRENCH WALL HAS BEEN DISTURBED, EXCAVATE LOOSE MATERIAL AND EXTEND THRUST BLOCK TO UNDISTURBED MATERIAL. NO JOINTS SHALL BE COVERED WITH CONCRETE.
3. ON BENDS AND TEES, EXTEND THRUST BLOCKS FULL LENGTH OF FITTING.
4. PLACE CONCRETE PATIO BLOCKS IN FRONT OF ALL PLUGS BEFORE POURING THRUST BLOCK.
5. PRE-FORMED AND PRE-POURED THRUST BLOCKS ARE NOT ACCEPTABLE.
6. THE USE OF A MECHANICAL JOINT RESTRAINT SYSTEM DOES NOT REDUCE THE REQUIREMENTS SHOWN IN THIS DETAIL.
7. ALL FITTINGS SHALL BE WRAPPED IN POLYETHYLENE OR BUILDING PAPER PRIOR TO INSTALLATION OF CONCRETE RESTRAINT.
8. IF THREADED ROD IS USED, IT SHALL BE ANSI A242 FY50 PIPE RESTRAINT NUTS TO MATCH AWWA C111.
9. SIZES FOR REDUCERS SHOWN ARE BASED ON THE SMALLEST AVAILABLE RUN SIZE FOR A GIVEN PIPE SIZE.
10. INSTALL LIFT HOOKS INTO THRUST BLOCKS AT END CAPS AND PLUGS.
11. TEST PRESSURE TO BE 200 PSI MIN. AT LOW END OF THE TEST SECTION. SQUARE FEET OF CONCRETE THRUST BLOCKING FOR OTHER TEST PRESSURES IS DIRECTLY PROPORTIONAL TO THE ABOVE TABLE. FOR INSTANCE, AT 300 PSI TEST PRESSURE, THE NUMBERS SHOWN IN THE ABOVE TABLE ARE MULTIPLIED BY 1.5. SEE BELOW FOR EXAMPLE CALCULATION.
12. THRUST BLOCK AREA IS BASED ON A SOIL BEARING STRENGTH OF 1500 LBS/SF AND A SAFETY FACTOR OF 1.5. MULTIPLY THE BEARING AREA FROM ABOVE (WITH CONSIDERATION OF TEST PRESSURE) AND MULTIPLY BY THE FOLLOWING FACTORS TO DETERMINE BEARING AREA REQUIRED FOR VARIOUS SOIL CONDITIONS:

SOIL TYPE	BEARING CAPACITY (LB/SF)	FACTOR
SOFT CLAY	1,000	1.50
SILT	1,500	1.00
SANDY SILT	3,000	0.50
SAND	4,000	0.38
SANDY GRAVEL	5,000	0.30
SANDY CLAY	6,000	0.25
GRAVEL W/ ROCK	7,000	0.21
HARD CLAY	9,000	0.17

EXAMPLE: AN 8-INCH 90° BEND IN SANDY GRAVEL SOILS, TEST PRESSURE OF 200 PSI:
AREA REQUIRED = 18.19SF x 1 x 0.30 = 5.46SF

THRUST BLOCK DETAILS AND NOTES

NOT TO SCALE

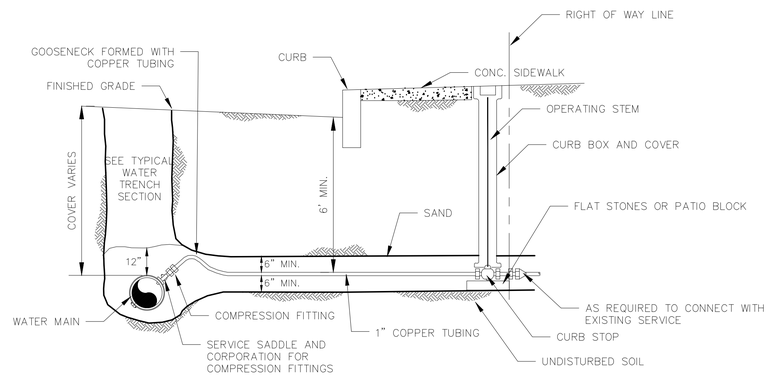

TYPICAL WATER SERVICE CONNECTION

NOT TO SCALE

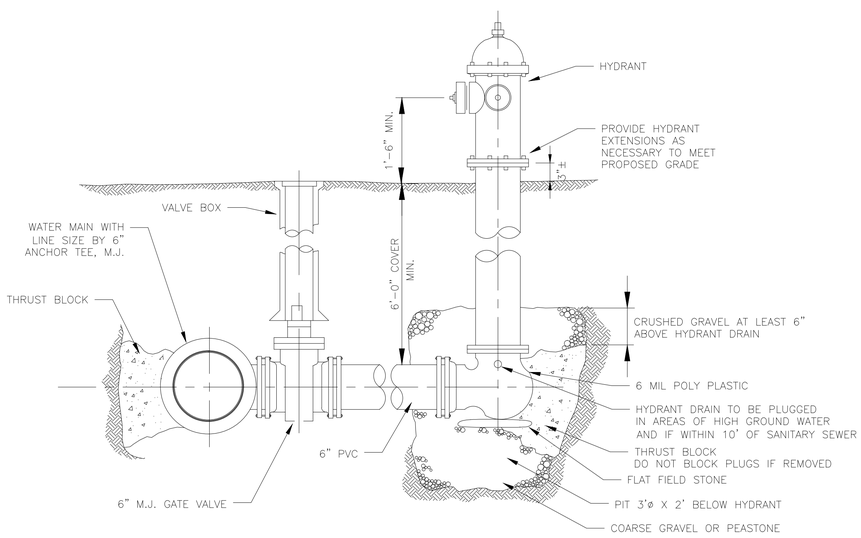

HYDRANT ASSEMBLY DETAIL

NOT TO SCALE

FINAL DESIGN SUBMITTAL
NOT FOR CONSTRUCTION

DUFRESNE GROUP
CONSULTING ENGINEERS
56 Main Street, Suite 200
Springfield, Vermont 05156
E-mail: info@dufresnegroup.com
Web: www.dufresnegroup.com
• • •
Springfield, VT • Tel: (802) 674-2904 Fax: (802) 674-2913
Barre, VT • Tel: (802) 479-3698
St. Johnsbury, VT • Tel: (802) 748-8605
Manchester, VT • Tel: (802) 768-8291
• • •
Dufresne Group is owned by Dufresne & Associates, PC

STATE OF VERMONT – ROBERT E. DUFRESNE – NO. 3834 – CIVIL – LICENSED PROFESSIONAL ENGINEER

2-6-17

REVISIONS

DATE	COMMENTS	BY

THIS DRAWING SHALL NOT BE REUSED OR ALTERED IN ANY WAY WITHOUT THE WRITTEN APPROVAL AND AUTHORITY OF DUFRESNE GROUP. ANY REVISIONS SHALL BE MADE BY DUFRESNE GROUP ©

NORTHFIELD STREET UTILITIES IMPROVEMENTS

WATER STANDARD DETAILS BASE BID

CITY OF MONTPELIER, VERMONT

Project #	8160003
Project Mgr.	R.E. DUFRESNE
Design by	B.L. BAKER
Drawn by	B.L. BAKER
Reviewed by	R.N. GOODWIN
Approved by	R.E. DUFRESNE
Date	FEBRUARY 6, 2017
Scale	AS SHOWN

C12

FILE: R:\Montpelier VT\City of Montpelier\8160003 - Northfield Street Utilities\CAD\8160002 - Northfield Street Details.dwg Feb 08, 2017 - 5:31pm

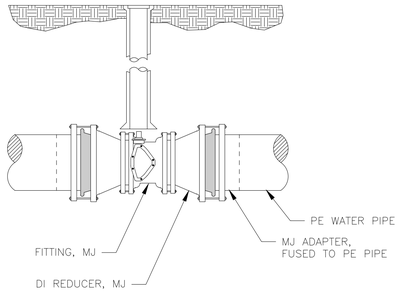

PE MJ CONNECTION DETAIL

SCALE: NOT TO SCALE

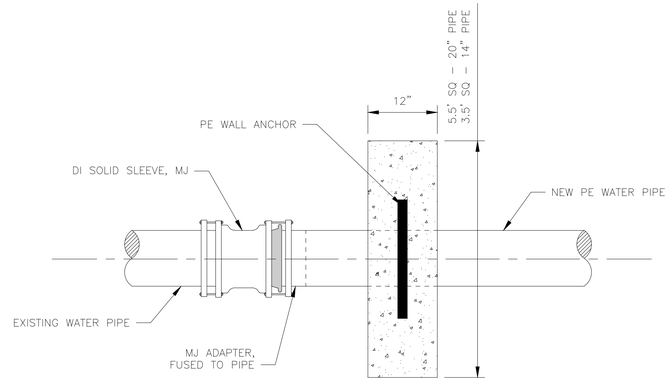

EXISTING PIPE CONNECTION DETAIL

SCALE: NOT TO SCALE

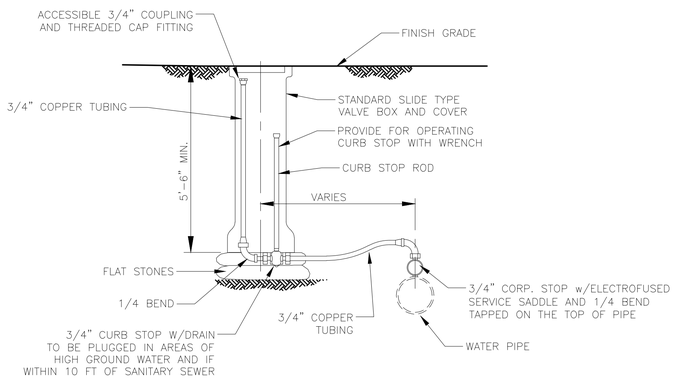

TYPICAL INSTALLATION-TRAVEL WAY FOR AIR VENT OR CHLORINATION INJECTION

NOT TO SCALE

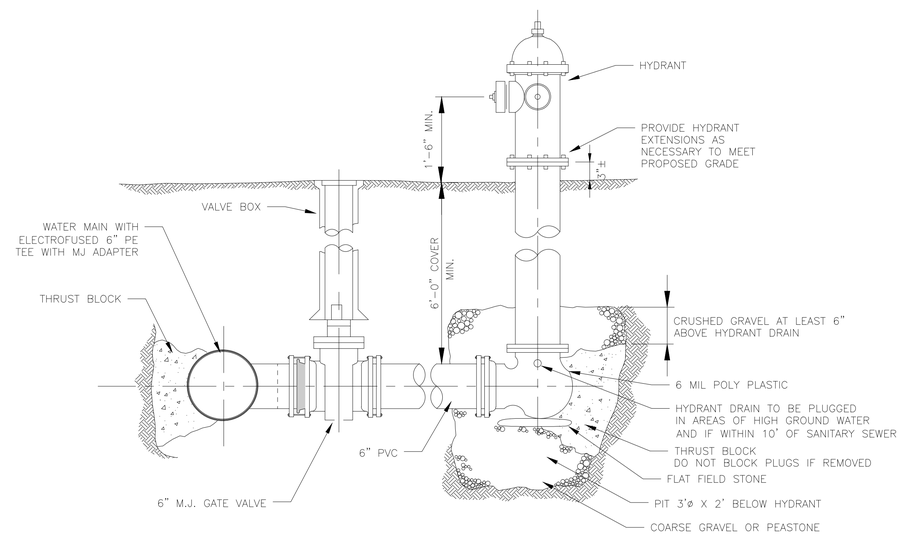

HYDRANT ASSEMBLY DETAIL

NOT TO SCALE

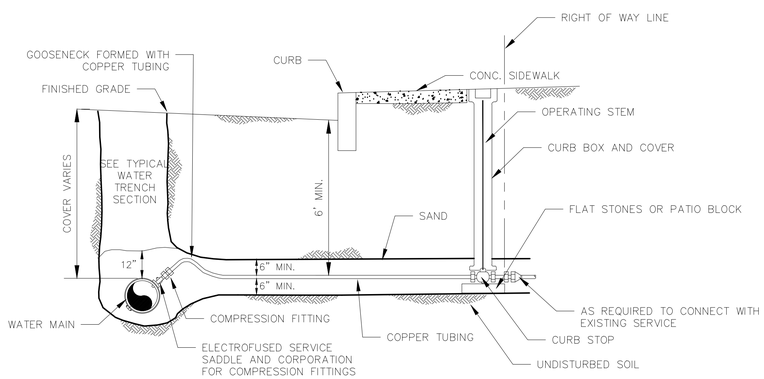

TYPICAL WATER SERVICE CONNECTION

NOT TO SCALE

FINAL DESIGN SUBMITTAL
NOT FOR CONSTRUCTION

DUFRESNE GROUP
CONSULTING ENGINEERS
56 Main Street, Suite 200
Springfield, Vermont 05156
E-mail: info@dufresnegroup.com
Web: www.dufresnegroup.com
• • •
Springfield, VT • Tel: (802) 674-2904 Fax: (802) 674-2913
Barre, VT • Tel: (802) 479-3698
St. Johnsbury, VT • Tel: (802) 748-8605
Manchester, VT • Tel: (802) 768-8291
• • •
Dufresne Group is owned by Dufresne & Associates, PC

STATE OF VERMONT — ROBERT E. DUFRESNE — NO. 3834 — CIVIL — LICENSED PROFESSIONAL ENGINEER

2-6-17

REVISIONS

DATE	COMMENTS	BY

THIS DRAWING SHALL NOT BE REUSED OR ALTERED IN ANY WAY WITHOUT THE WRITTEN APPROVAL AND AUTHORITY OF DUFRESNE GROUP. ANY REVISIONS SHALL BE MADE BY DUFRESNE GROUP ©

NORTHFIELD STREET UTILITIES IMPROVEMENTS

HDPE WATER DETAILS

CITY OF MONTPELIER, VERMONT

Project #	8160003
Project Mgr.	R.E. DUFRESNE
Design by	B.L. BAKER
Drawn by	B.L. BAKER
Reviewed by	T.P. KNAPP
Approved by	R.E. DUFRESNE
Date	FEBRUARY 6, 2017
Scale	AS SHOWN

C13

FILE: R:\Montpelier VT\City of Montpelier\8160003 – Northfield Street Utilities\CAD\8160002 – Northfield Street Details.dwg Feb 08, 2017 – 5:31pm

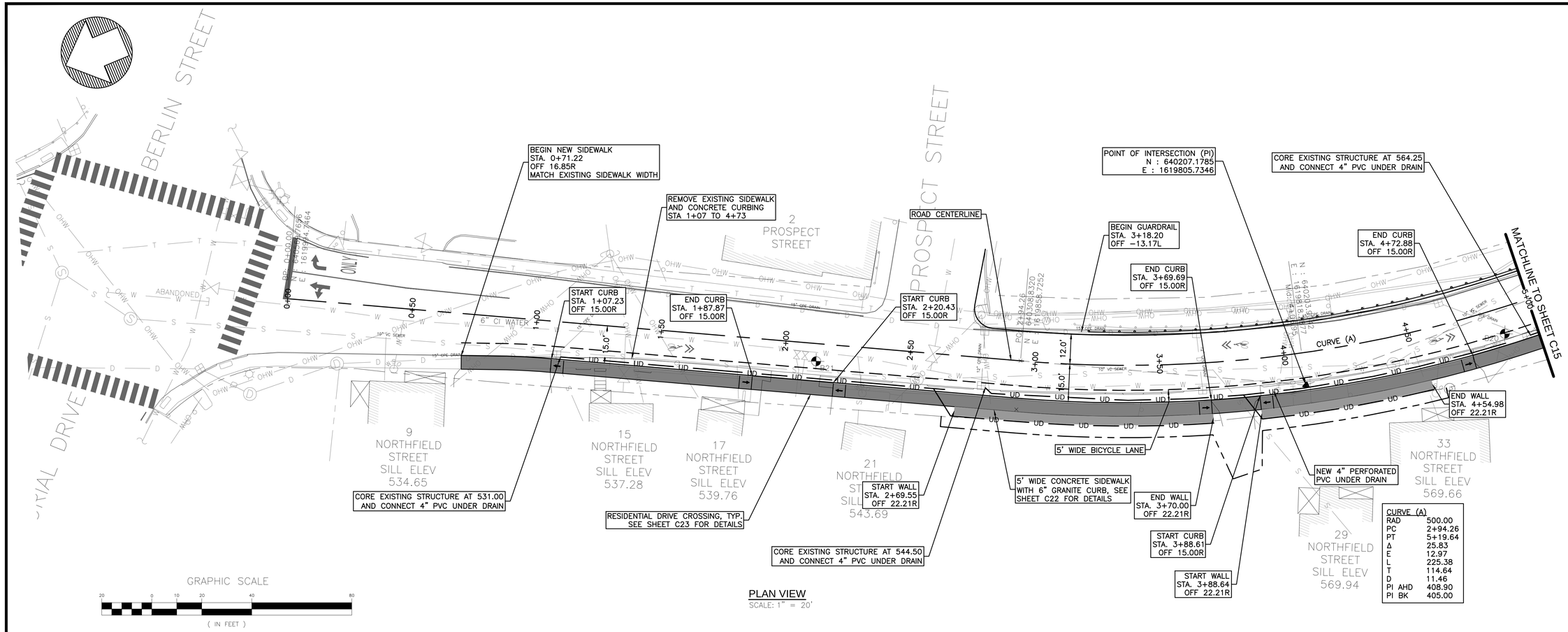

CURVE (A)	
RAD	500.00
PC	2+94.26
PT	5+19.64
Δ	25.83
E	12.97
L	225.38
T	114.64
D	11.46
PI AHD	408.90
PI BK	405.00

PLAN VIEW
SCALE: 1" = 20'

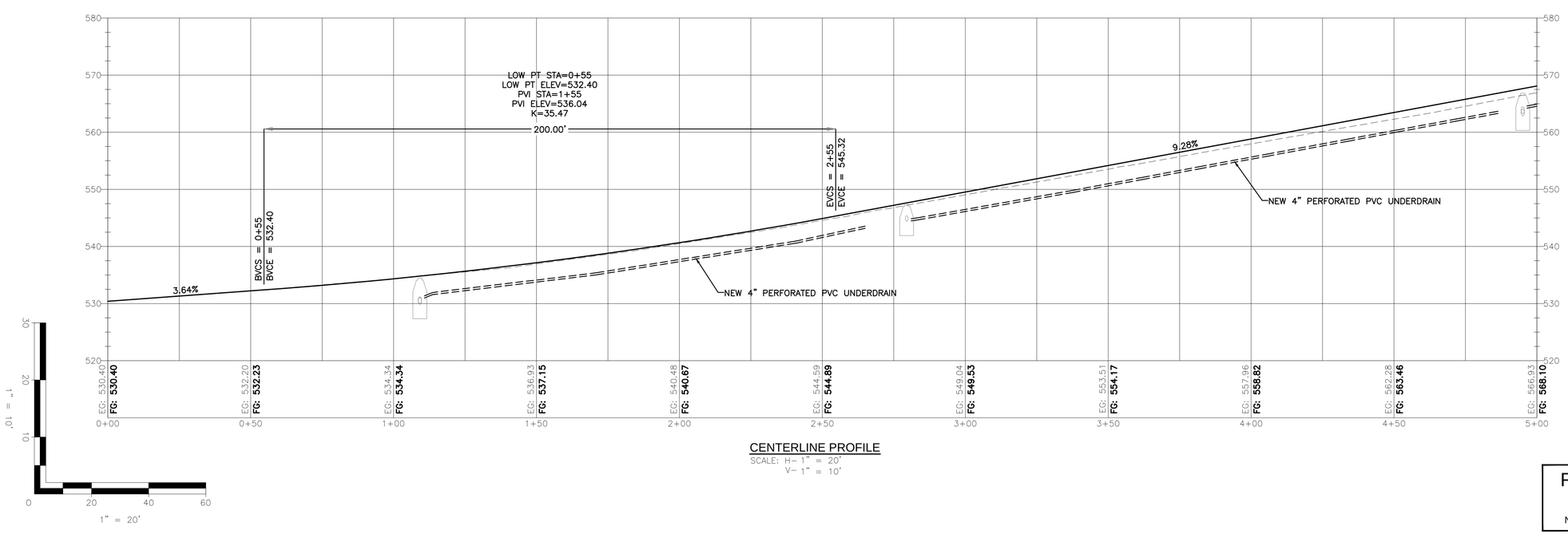

CENTERLINE PROFILE
SCALE: H– 1" = 20'
V– 1" = 10'

FINAL DESIGN SUBMITTAL
NOT FOR CONSTRUCTION

DUFRESNE GROUP
CONSULTING ENGINEERS
56 Main Street, Suite 200
Springfield, Vermont 05156
E-mail: info@dufresnegroup.com
Web: www.dufresnegroup.com
Springfield, VT • Tel: (802) 674-2904 Fax: (802) 674-2913
Barre, VT • Tel: (802) 479-3698
St. Johnsbury, VT • Tel: (802) 748-8605
Manchester, VT • Tel: (802) 768-8291
Dufresne Group is owned by Dufresne & Associates, PC

STATE OF VERMONT
ROBERT E. DUFRESNE
NO. 3834
CIVIL
LICENSED PROFESSIONAL ENGINEER
2-6-17

REVISIONS

DATE	COMMENTS	BY

THIS DRAWING SHALL NOT BE REUSED OR ALTERED IN ANY WAY WITHOUT THE WRITTEN APPROVAL AND AUTHORITY OF DUFRESNE GROUP. ANY REVISIONS SHALL BE MADE BY DUFRESNE GROUP ©

NORTHFIELD STREET UTILITIES IMPROVEMENTS

ROAD AND SIDEWALK PLAN AND PROFILE STATION 0+00 TO 5+00

CITY OF MONTPELIER, VERMONT

Project #	8160003
Project Mgr.	R.E. DUFRESNE
Design by	B.L. BAKER
Drawn by	C.W. FLOWER
Reviewed by	T.P. KNAPP
Approved by	R.E. DUFRESNE
Date	FEBRUARY 6, 2017
Scale	AS SHOWN

C14

FILE: R:\Montpelier VT\City of Montpelier\8160003 – Northfield Street Utilities\CAD\8160002 – Northfield Street Road & Sidewalk.dwg Feb 08, 2017 – 5:33pm

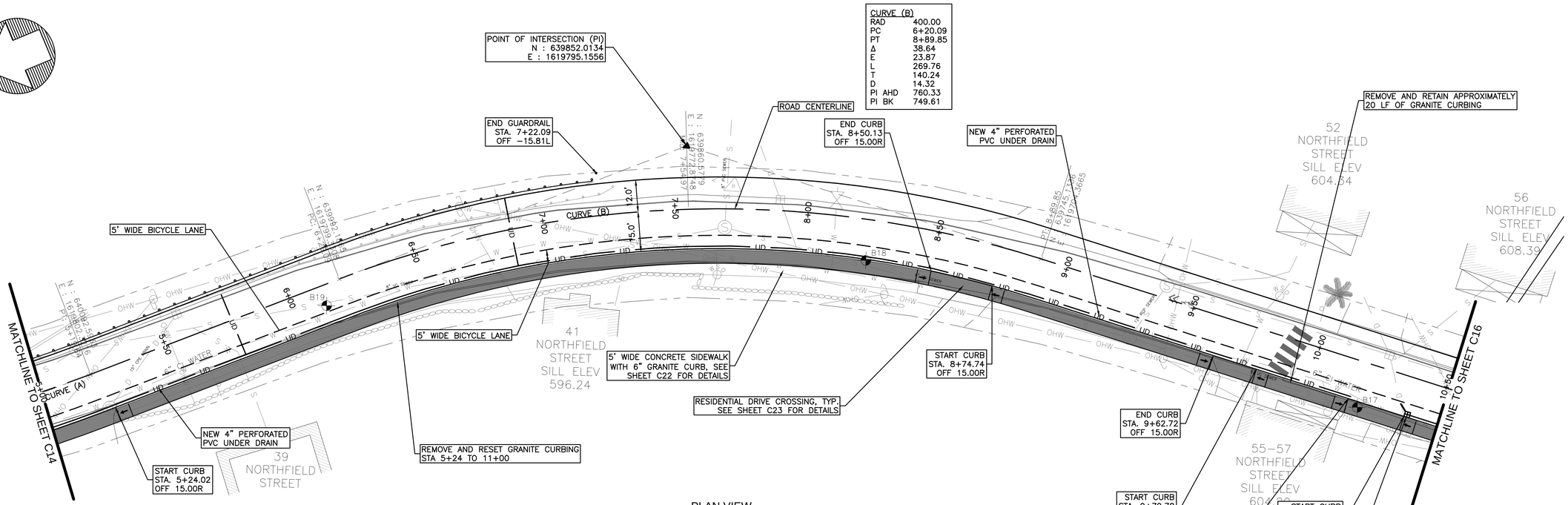

PLAN VIEW
SCALE: 1" = 20'

CURVE (A)	
RAD	500.00
PC	2+94.26
PT	5+19.64
Δ	25.83
E	12.97
L	225.38
T	114.64
D	11.46
PI AHD	408.90
PI BK	405.00

CURVE (B)	
RAD	400.00
PC	6+20.09
PT	8+89.85
Δ	38.64
E	23.87
L	269.76
T	140.24
D	14.32
PI AHD	760.33
PI BK	749.61

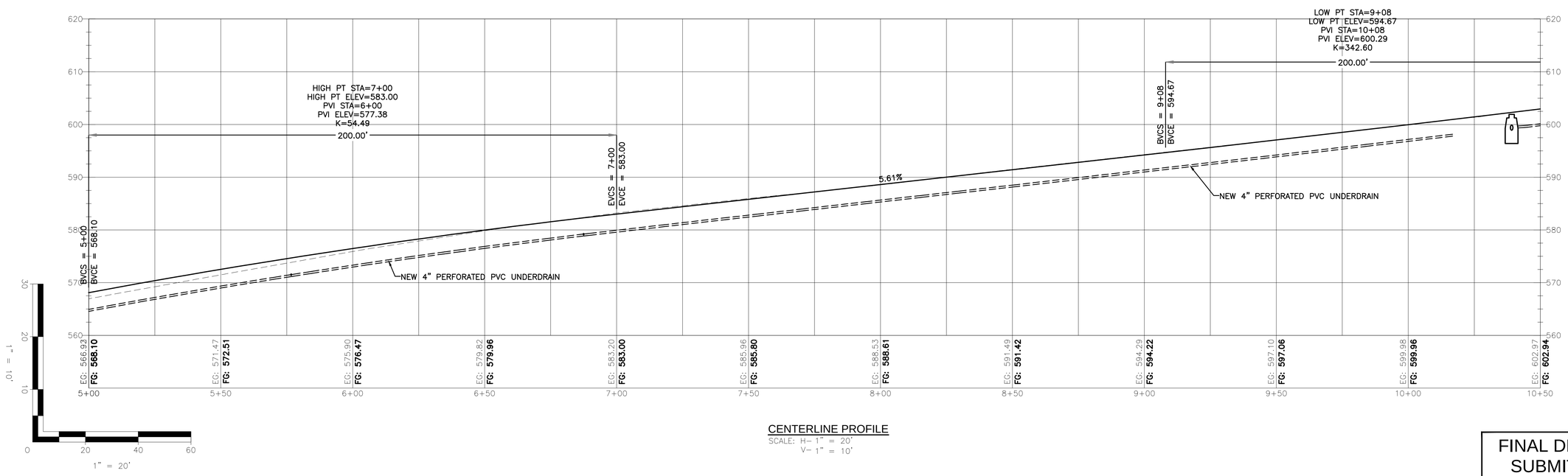

CENTERLINE PROFILE
SCALE: H- 1" = 20'
V- 1" = 10'

FINAL DESIGN
SUBMITTAL
NOT FOR CONSTRUCTION

DUFRESNE GROUP
CONSULTING ENGINEERS
56 Main Street, Suite 200
Springfield, Vermont 05156
E-mail: info@dufresnegroup.com
Web: www.dufresnegroup.com
Springfield, VT • Tel: (802) 674-2904 Fax: (802) 674-2913
Barre, VT • Tel: (802) 479-3698
St. Johnsbury, VT • Tel: (802) 748-8605
Manchester, VT • Tel: (802) 768-8291
Dufresne Group is owned by Dufresne & Associates, PC

STATE OF VERMONT
ROBERT E. DUFRESNE
NO. 3034
CIVIL
LICENSED PROFESSIONAL ENGINEER
2-6-17

REVISIONS

DATE	COMMENTS	BY

THIS DRAWING SHALL NOT BE REUSED OR ALTERED IN ANY WAY WITHOUT THE WRITTEN APPROVAL AND AUTHORITY OF DUFRESNE GROUP. ANY REVISIONS SHALL BE MADE BY DUFRESNE GROUP ©

NORTHFIELD STREET UTILITIES IMPROVEMENTS

ROAD AND SIDEWALK PLAN AND PROFILE STATION 5+00 TO 10+50

CITY OF MONTPELIER, VERMONT

Project #	8160003
Project Mgr.	R.E. DUFRESNE
Design by	B.L. BAKER
Drawn by	C.W. FLOWER
Reviewed by	T.P. KNAPP
Approved by	R.E. DUFRESNE
Date	FEBRUARY 6, 2017
Scale	AS SHOWN

C15

FILE: R:\Montpelier VT\City of Montpelier\8160003 - Northfield Street Utilities\CAD\8160002 - Northfield Street Road & Sidewalk.dwg Feb 08, 2017 - 5:33pm

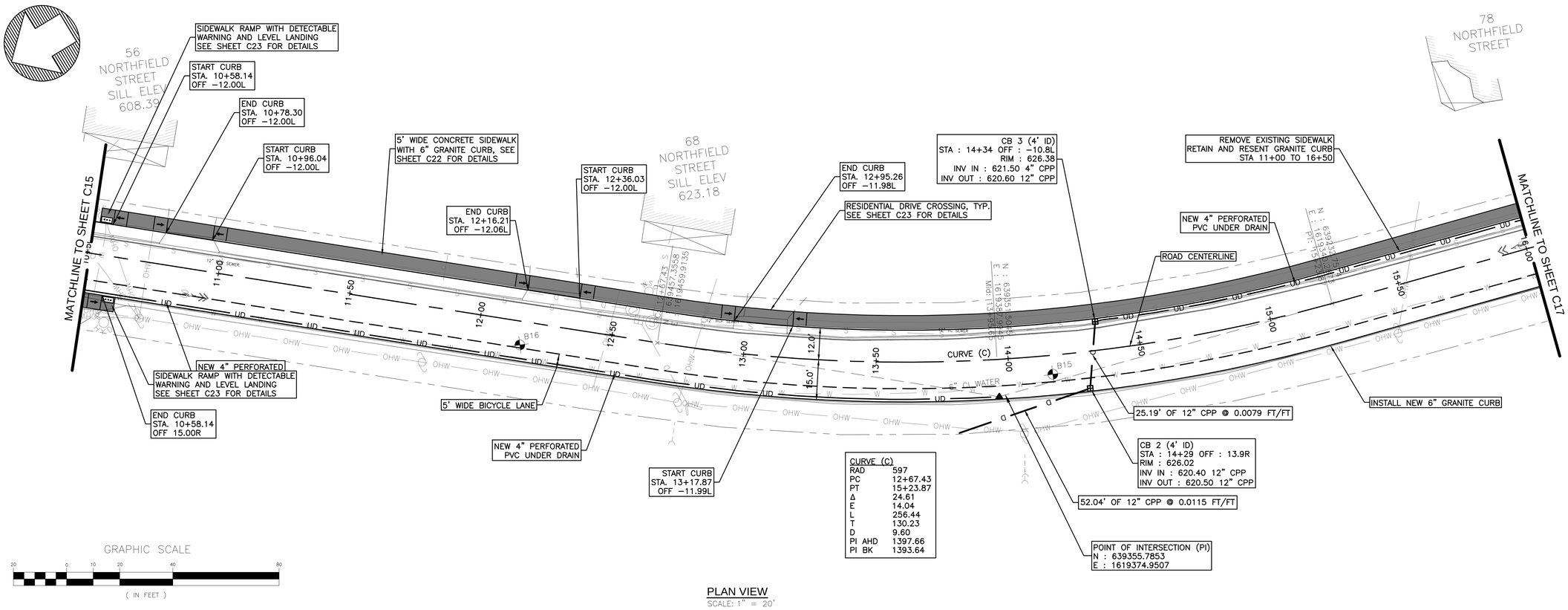

CURVE (C)	
RAD	597
PC	12+67.43
PT	15+23.87
Δ	24.61
E	14.04
L	256.44
T	130.23
D	9.60
PI AHD	1397.66
PI BK	1393.64

PLAN VIEW
SCALE: 1" = 20'

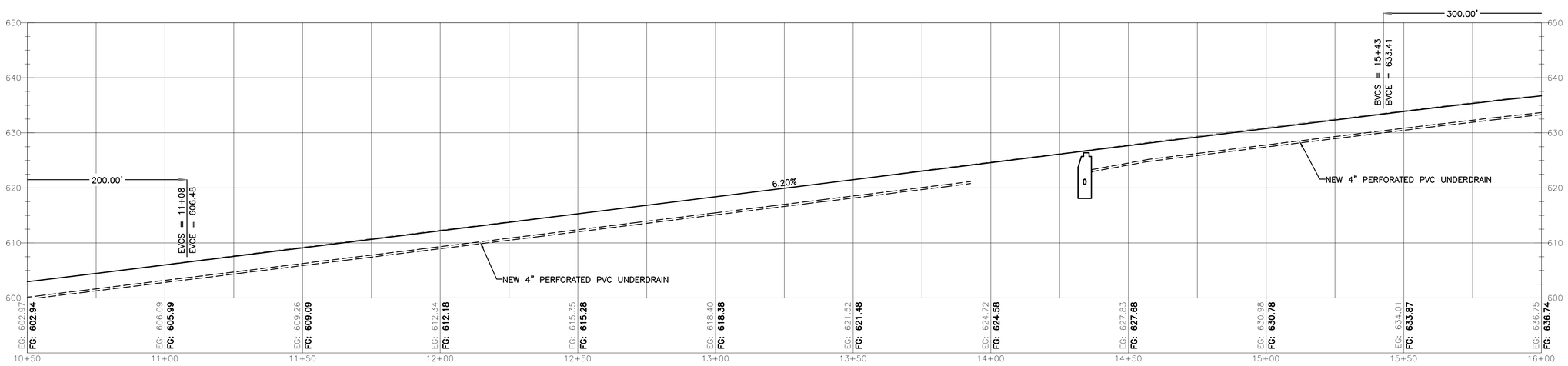

CENTERLINE PROFILE
SCALE: H- 1" = 20'
V- 1" = 10'

1" = 10'
1" = 20'

FINAL DESIGN SUBMITTAL
NOT FOR CONSTRUCTION

DUFRESNE GROUP
CONSULTING ENGINEERS
56 Main Street, Suite 200
Springfield, Vermont 05156
E-mail: info@dufresnegroup.com
Web: www.dufresnegroup.com
Springfield, VT • Tel: (802) 674-2904 Fax: (802) 674-2913
Barre, VT • Tel: (802) 479-3698
St. Johnsbury, VT • Tel: (802) 748-8605
Manchester, VT • Tel: (802) 768-8291
Dufresne Group is owned by Dufresne & Associates, PC

STATE OF VERMONT ROBERT E. DUFRESNE NO. 3834 CIVIL LICENSED PROFESSIONAL ENGINEER

2-6-17

REVISIONS

DATE	COMMENTS	BY

THIS DRAWING SHALL NOT BE REVISED OR ALTERED IN ANY WAY WITHOUT THE WRITTEN APPROVAL AND AUTHORITY OF DUFRESNE GROUP. ANY REVISIONS SHALL BE MADE BY DUFRESNE GROUP ©

NORTHFIELD STREET UTILITIES IMPROVEMENTS

ROAD AND SIDEWALK
PLAN AND PROFILE
STATION 10+50 TO 16+00

CITY OF MONTPELIER, VERMONT

Project #	8160003
Project Mgr.	R.E. DUFRESNE
Design by	B.L. BAKER
Drawn by	C.W. FLOWER
Reviewed by	T.P. KNAPP
Approved by	R.E. DUFRESNE
Date	FEBRUARY 6, 2017
Scale	AS SHOWN

C16

FILE: R:\Montpelier VT\City of Montpelier\8160003 - Northfield Street Utilities\CAD\8160002 - Northfield Street Road & Sidewalk.dwg Feb 08, 2017 - 5:35pm

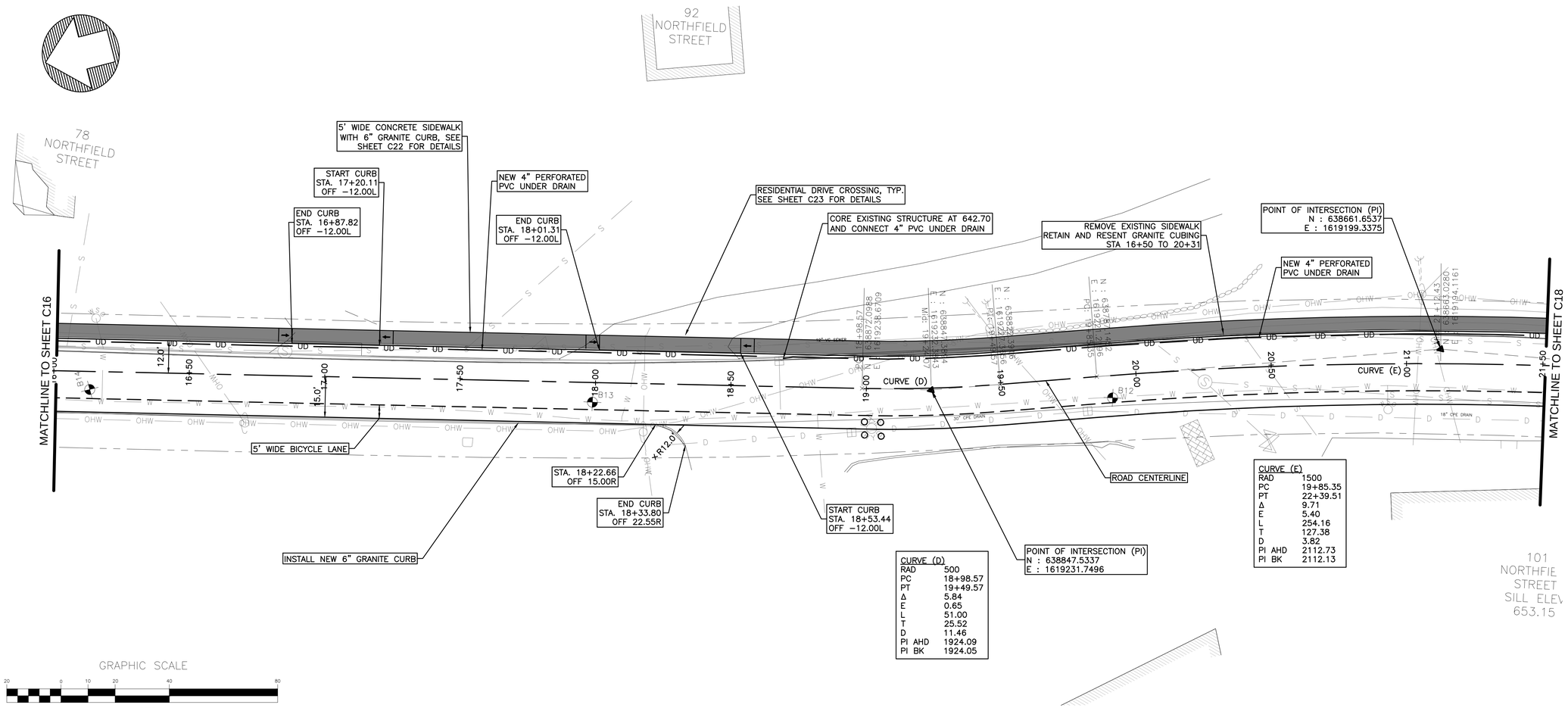

PLAN VIEW
SCALE: 1" = 20'

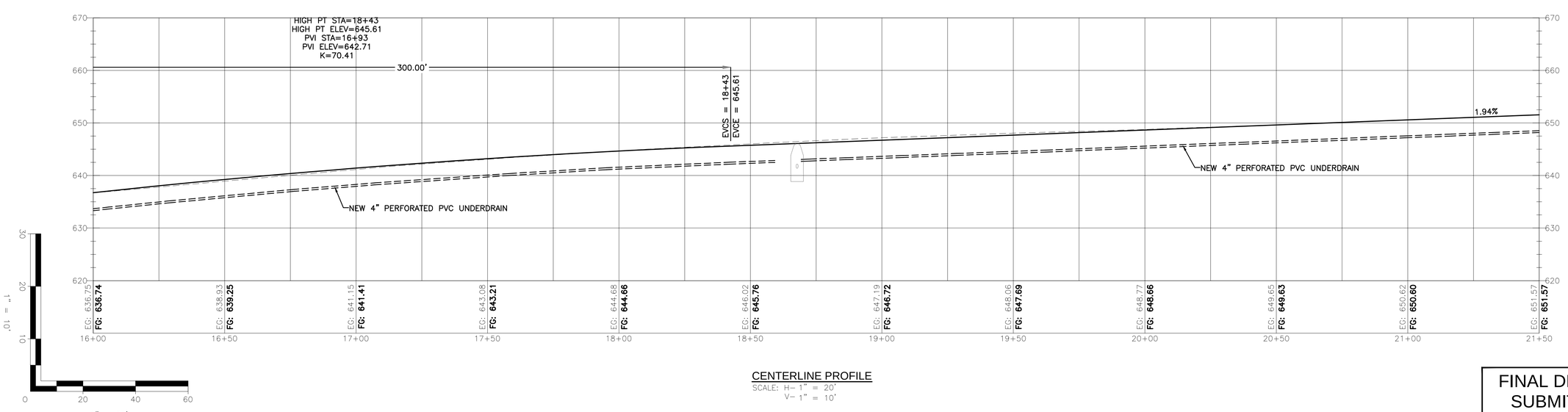

CENTERLINE PROFILE
SCALE: H- 1" = 20'
V- 1" = 10'

FINAL DESIGN SUBMITTAL
NOT FOR CONSTRUCTION

DUFRESNE GROUP
CONSULTING ENGINEERS
56 Main Street, Suite 200
Springfield, Vermont 05156
E-mail: info@dufresnegroup.com
Web: www.dufresnegroup.com
Springfield, VT • Tel: (802) 674-2904 Fax: (802) 674-2913
Barre, VT • Tel: (802) 479-3698
St. Johnsbury, VT • Tel: (802) 748-8605
Manchester, VT • Tel: (802) 768-8291
Dufresne Group is owned by Dufresne & Associates, PC

STATE OF VERMONT ROBERT E. DUFRESNE NO. 3834 CIVIL LICENSED PROFESSIONAL ENGINEER
2-6-17

REVISIONS

DATE	COMMENTS	BY

THIS DRAWING SHALL NOT BE REUSED OR ALTERED IN ANY WAY WITHOUT THE WRITTEN APPROVAL AND AUTHORITY OF DUFRESNE GROUP. ANY REVISIONS SHALL BE MADE BY DUFRESNE GROUP ©

NORTHFIELD STREET UTILITIES IMPROVEMENTS

ROAD AND SIDEWALK PLAN AND PROFILE STATION 16+00 TO 21+50

CITY OF MONTPELIER, VERMONT

Project #	8160003
Project Mgr.	R.E. DUFRESNE
Design by	B.L. BAKER
Drawn by	C.W. FLOWER
Reviewed by	T.P. KNAPP
Approved by	R.E. DUFRESNE
Date	FEBRUARY 6, 2017
Scale	AS SHOWN

C17

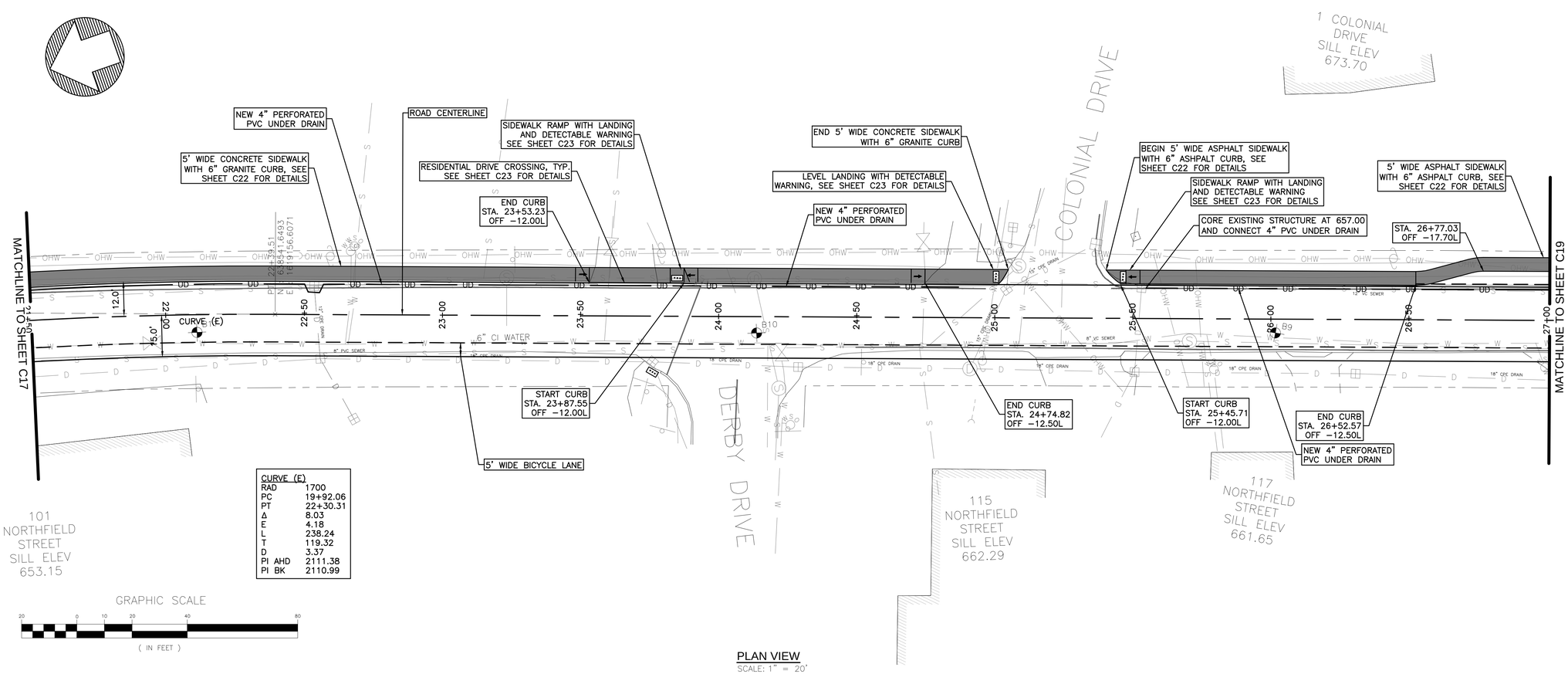

CURVE (E)	
RAD	1700
PC	19+92.06
PT	22+30.31
Δ	8.03
E	4.18
L	238.24
T	119.32
D	3.37
PI AHD	2111.38
PI BK	2110.99

PLAN VIEW
SCALE: 1" = 20'

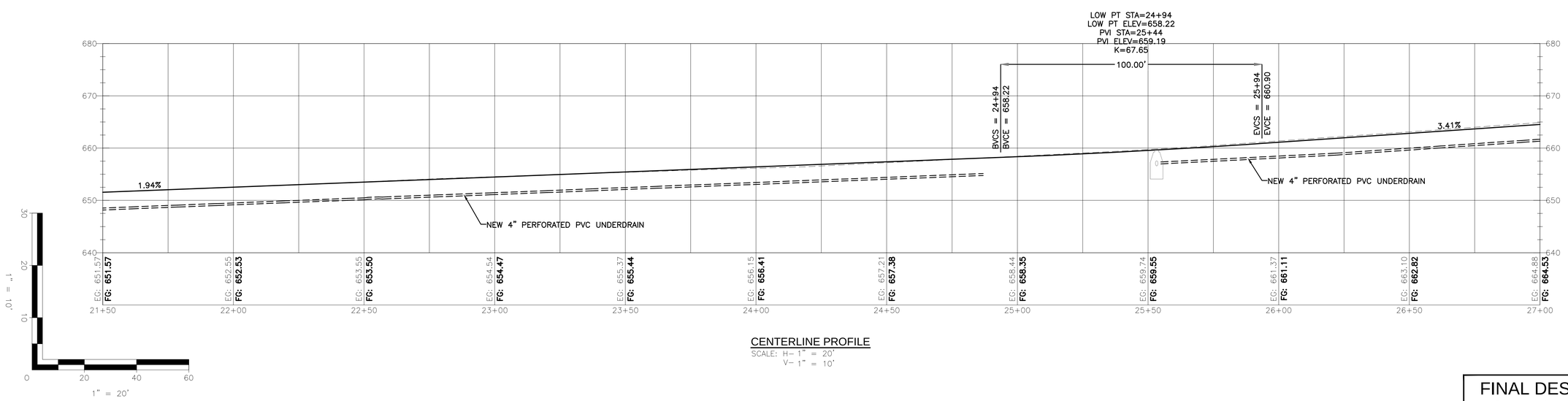

CENTERLINE PROFILE
SCALE: H- 1" = 20'
V- 1" = 10'

FINAL DESIGN SUBMITTAL
NOT FOR CONSTRUCTION

DUFRESNE GROUP
CONSULTING ENGINEERS
56 Main Street, Suite 200
Springfield, Vermont 05156
E-mail: info@dufresnegroup.com
Web: www.dufresnegroup.com
• • •
Springfield, VT • Tel: (802) 674-2904 Fax: (802) 674-2913
Barre, VT • Tel: (802) 479-3698
St. Johnsbury, VT • Tel: (802) 748-8605
Manchester, VT • Tel: (802) 768-8291
• • •
Dufresne Group is owned by Dufresne & Associates, PC

STATE OF VERMONT — REGISTERED PROFESSIONAL ENGINEER — NO. 3834 — CIVIL — LICENSED — RENE E. DUFRESNE
2-6-17

REVISIONS

DATE	COMMENTS	BY

THIS DRAWING SHALL NOT BE REUSED OR ALTERED IN ANY WAY WITHOUT THE WRITTEN APPROVAL AND AUTHORITY OF DUFRESNE GROUP. ANY REVISIONS SHALL BE MADE BY DUFRESNE GROUP ©

NORTHFIELD STREET UTILITIES IMPROVEMENTS

ROAD AND SIDEWALK PLAN AND PROFILE STATON 21+50 TO 27+00

CITY OF MONTPELIER, VERMONT

Project #	8160003
Project Mgr.	R.E. DUFRESNE
Design by	B.L. BAKER
Drawn by	C.W. FLOWER
Reviewed by	T.P. KNAPP
Approved by	R.E. DUFRESNE
Date	FEBRUARY 6, 2017
Scale	AS SHOWN

C18

FILE: R:\Montpelier VT\City of Montpelier\8160003 - Northfield Street Utilities\CAD\8160002 - Northfield Street Road & Sidewalk.dwg Feb 08, 2017 - 5:34pm

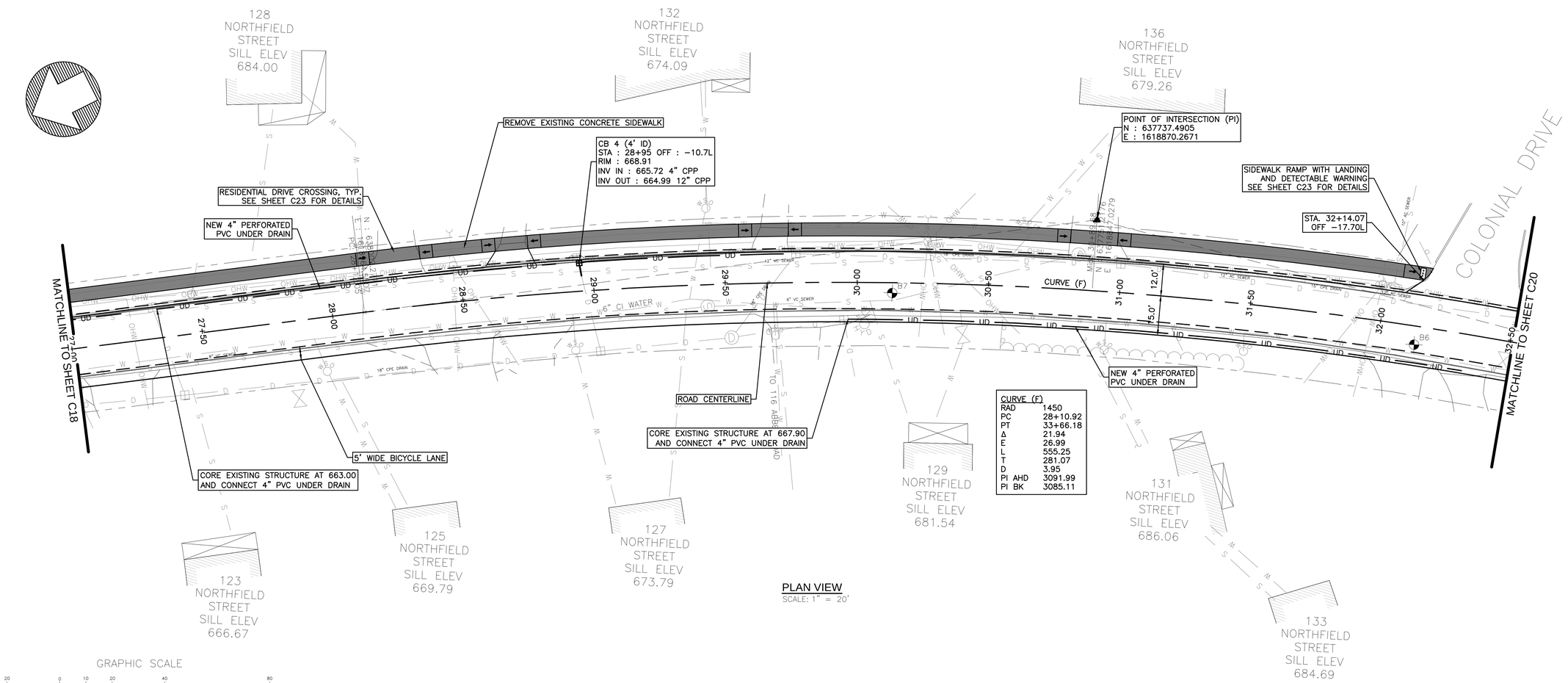

CURVE (F)	
RAD	1450
PC	28+10.92
PT	33+66.18
Δ	21.94
E	26.99
L	555.25
T	281.07
D	3.95
PI AHD	3091.99
PI BK	3085.11

PLAN VIEW
SCALE: 1" = 20'

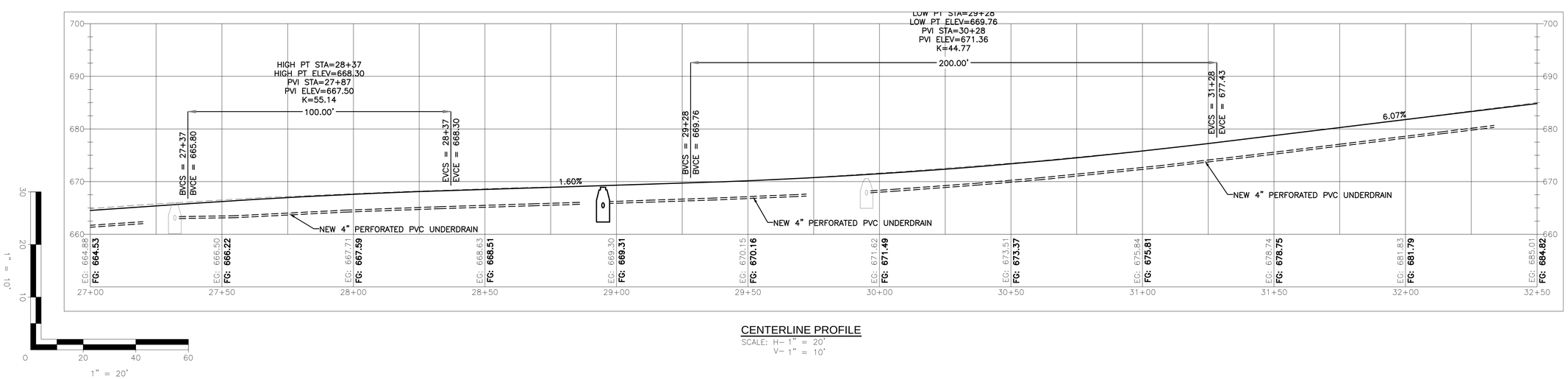

CENTERLINE PROFILE
SCALE: H- 1" = 20'
V- 1" = 10'

FINAL DESIGN SUBMITTAL
NOT FOR CONSTRUCTION

DUFRESNE GROUP
CONSULTING ENGINEERS
56 Main Street, Suite 200
Springfield, Vermont 05156
E-mail: info@dufresnegroup.com
Web: www.dufresnegroup.com
Springfield, VT • Tel: (802) 674-2904 Fax: (802) 674-2913
Barre, VT • Tel: (802) 479-3698
St. Johnsbury, VT • Tel: (802) 748-8605
Manchester, VT • Tel: (802) 768-8291
Dufresne Group is owned by Dufresne & Associates, PC

STATE OF VERMONT
ROBERT E. DUFRESNE
NO. 3834
CIVIL
LICENSED PROFESSIONAL ENGINEER
2-6-17

REVISIONS

DATE	COMMENTS	BY

THIS DRAWING SHALL NOT BE REVISED OR ALTERED IN ANY WAY WITHOUT THE WRITTEN APPROVAL AND AUTHORITY OF DUFRESNE GROUP. ANY REVISIONS SHALL BE MADE BY DUFRESNE GROUP ©

NORTHFIELD STREET UTILITIES IMPROVEMENTS

ROAD AND SIDEWALK PLAN AND PROFILE STATON 27+00 TO 32+50

CITY OF MONTPELIER, VERMONT

Project #	8160003
Project Mgr.	R.E. DUFRESNE
Design by	B.L. BAKER
Drawn by	C.W. FLOWER
Reviewed by	T.P. KNAPP
Approved by	R.E. DUFRESNE
Date	FEBRUARY 6, 2017
Scale	AS SHOWN

C19

FILE: R:\Montpelier VT\City of Montpelier\8160003 - Northfield Street Utilities\CAD\8160002 - Northfield Street Road & Sidewalk.dwg Feb 08, 2017 - 5:34pm

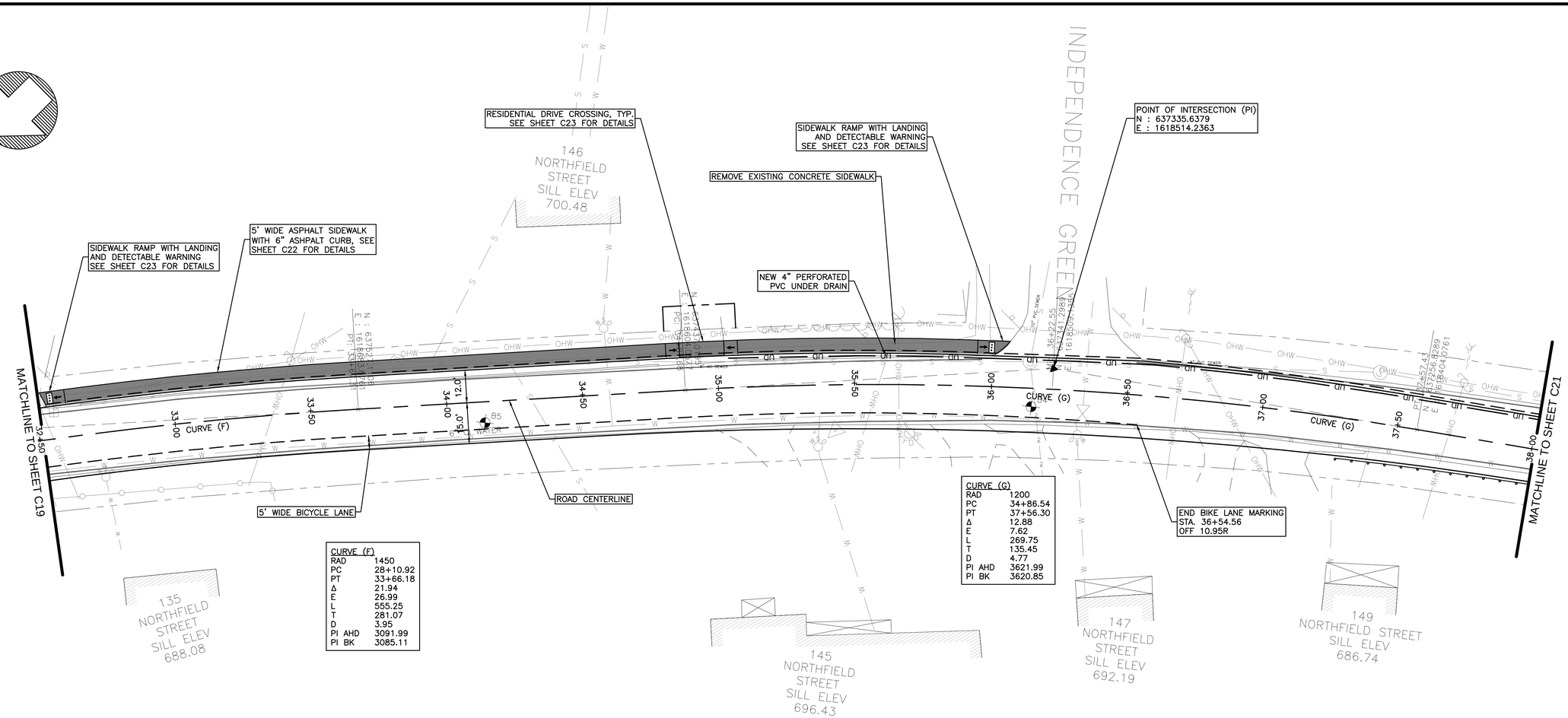

CURVE (F)	
RAD	1450
PC	28+10.92
PT	33+66.18
Δ	21.94
E	26.99
L	555.25
T	281.07
D	3.95
PI AHD	3091.99
PI BK	3085.11

CURVE (G)	
RAD	1200
PC	34+86.54
PT	37+56.30
Δ	12.88
E	7.62
L	269.75
T	135.45
D	4.77
PI AHD	3621.99
PI BK	3620.85

PLAN VIEW
SCALE: 1" = 20'

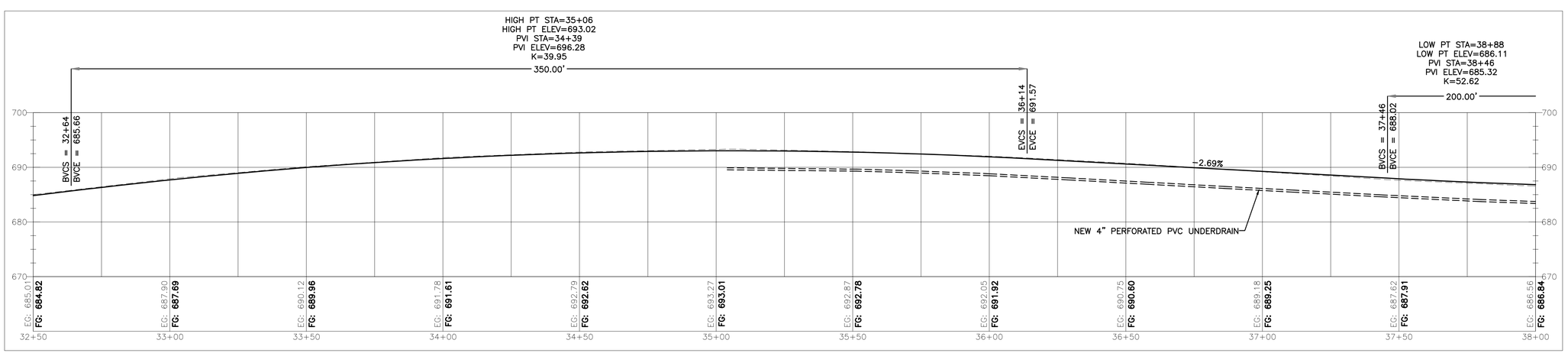

CENTERLINE PROFILE
SCALE: H- 1" = 20'
V- 1" = 10'

1" = 10'
1" = 20'

FINAL DESIGN SUBMITTAL
NOT FOR CONSTRUCTION

DUFRESNE GROUP
CONSULTING ENGINEERS
56 Main Street, Suite 200
Springfield, Vermont 05156
E-mail: info@dufresnegroup.com
Web: www.dufresnegroup.com
Springfield, VT • Tel: (802) 674-2904 Fax: (802) 674-2913
Barre, VT • Tel: (802) 479-3698
St. Johnsbury, VT • Tel: (802) 748-8605
Manchester, VT • Tel: (802) 768-8291
Dufresne Group is owned by Dufresne & Associates, PC

STATE OF VERMONT
ROBERT E. DUFRESNE
NO. 3834
CIVIL
LICENSED PROFESSIONAL ENGINEER

2-6-17

REVISIONS

DATE	COMMENTS	BY

THIS DRAWING SHALL NOT BE REVISED OR ALTERED IN ANY WAY WITHOUT THE WRITTEN APPROVAL AND AUTHORITY OF DUFRESNE GROUP. ANY REVISIONS SHALL BE MADE BY DUFRESNE GROUP ©

NORTHFIELD STREET UTILITIES IMPROVEMENTS

ROAD AND SIDEWALK
PLAN AND PROFILE
STATON 32+50 TO 38+00

CITY OF MONTPELIER, VERMONT

Project #	8160003
Project Mgr.	R.E. DUFRESNE
Design by	B.L. BAKER
Drawn by	C.W. FLOWER
Reviewed by	T.P. KNAPP
Approved by	R.E. DUFRESNE
Date	FEBRUARY 6, 2017
Scale	AS SHOWN

C20

FILE: R:\Montpelier VT\City of Montpelier\8160003 - Northfield Street Utilities\CAD\8160002 - Northfield Street Road & Sidewalk.dwg Feb 08, 2017 - 5:35pm

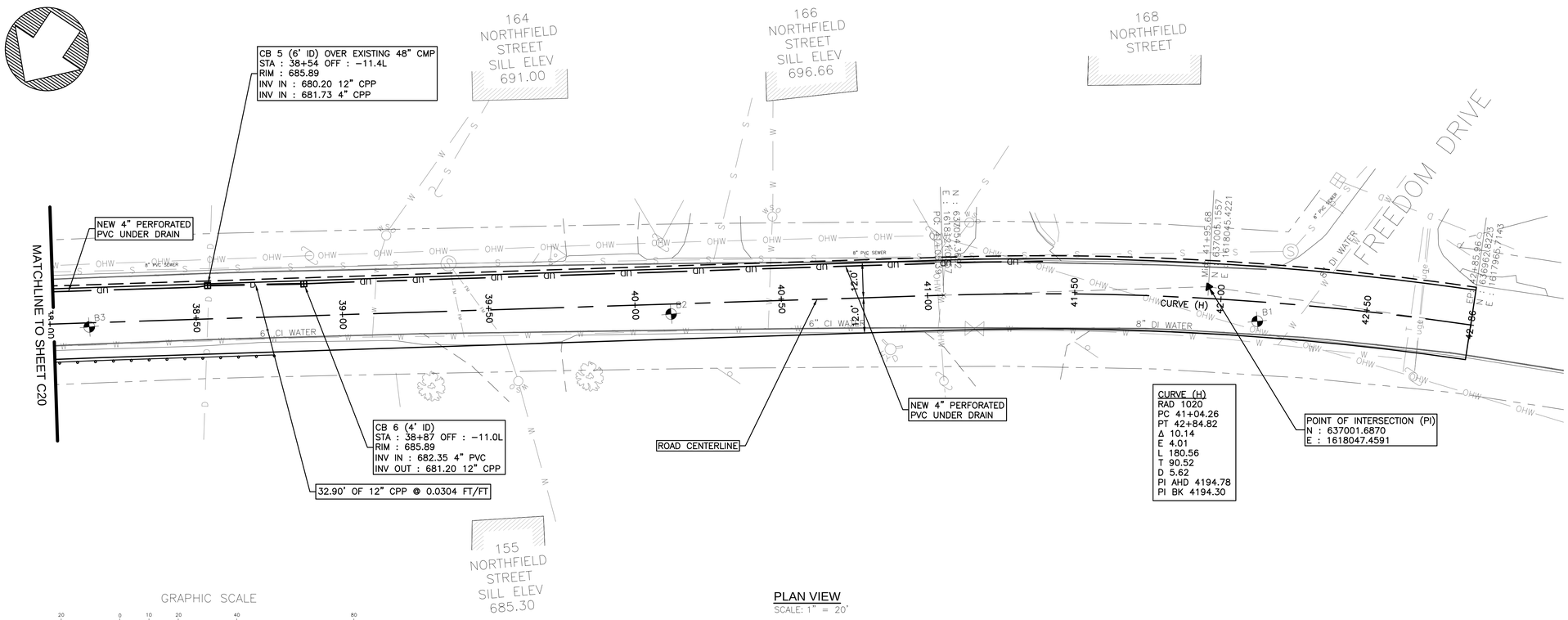

PLAN VIEW
SCALE: 1" = 20'

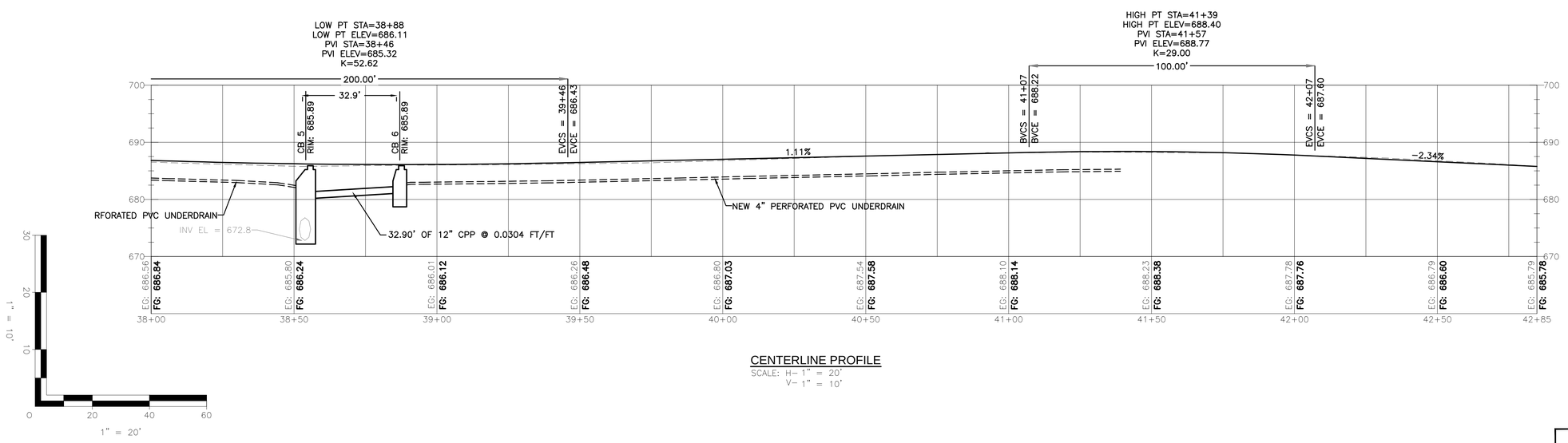

CENTERLINE PROFILE
SCALE: H- 1" = 20'
V- 1" = 10'

FINAL DESIGN SUBMITTAL
NOT FOR CONSTRUCTION

DUFRESNE GROUP
CONSULTING ENGINEERS
56 Main Street, Suite 200
Springfield, Vermont 05156
E-mail: info@dufresnegroup.com
Web: www.dufresnegroup.com
Springfield, VT • Tel: (802) 674-2904 Fax: (802) 674-2913
Barre, VT • Tel: (802) 479-3698
St. Johnsbury, VT • Tel: (802) 748-8605
Manchester, VT • Tel: (802) 768-8291
Dufresne Group is owned by Dufresne & Associates, PC

STATE OF VERMONT ROBERT E. DUFRESNE NO. 3834 CIVIL LICENSED PROFESSIONAL ENGINEER
2-6-17

REVISIONS

DATE	COMMENTS	BY

THIS DRAWING SHALL NOT BE REUSED OR ALTERED IN ANY WAY WITHOUT THE WRITTEN APPROVAL AND AUTHORITY OF DUFRESNE GROUP. ANY REVISIONS SHALL BE MADE BY DUFRESNE GROUP ©

NORTHFIELD STREET UTILITIES IMPROVEMENTS

ROAD AND SIDEWALK PLAN AND PROFILE STATON 38+00 TO 42+85

CITY OF MONTPELIER, VERMONT

Project #	8160003
Project Mgr.	R.E. DUFRESNE
Design by	B.L. BAKER
Drawn by	C.W. FLOWER
Reviewed by	T.P. KNAPP
Approved by	R.E. DUFRESNE
Date	FEBRUARY 6, 2017
Scale	AS SHOWN

C21

FILE: R:\Montpelier VT\City of Montpelier\8160003 - Northfield Street Utilities\CAD\8160002 - Northfield Street Road & Sidewalk.dwg Feb 08, 2017 - 5:35pm

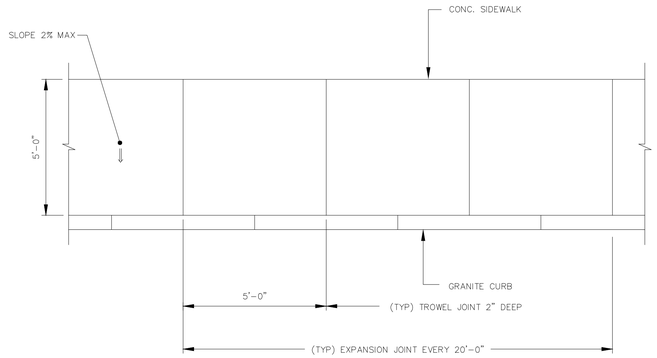

PLAN – TYPICAL CONCRETE WALK DETAIL

NOT TO SCALE

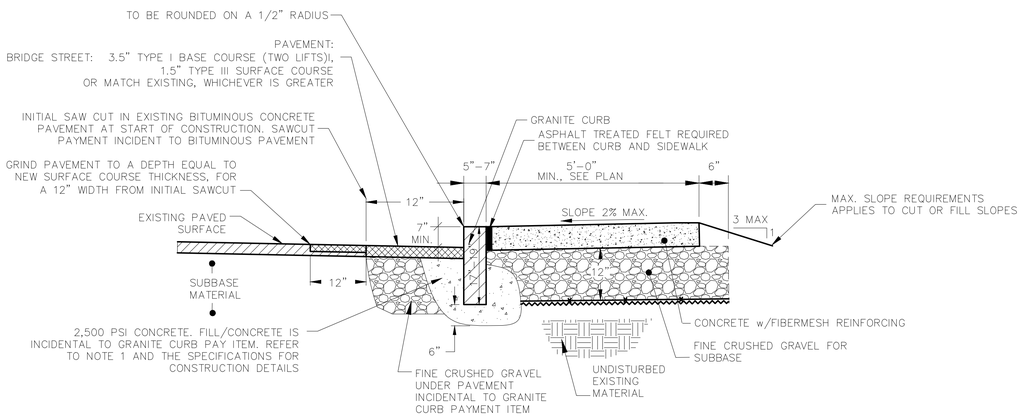

GRANITE CURB AND CONCRETE SIDEWALK DETAIL

NOT TO SCALE

NOTES:

1. TWO SECTIONS OF FINE CRUSHED GRAVEL ARE ACCEPTABLE FOR INITIAL CURB INSTALLATION AND LEVELING PRIOR TO THE CONCRETE PROVIDED THE TWO SECTIONS OF GRAVEL DO NOT EXCEED 10% OF THE CURB LENGTH.
2. RESTORE ALL DISTURBED GRASS AREAS TO CLASS A RESTORATION, PER SPECIAL PROVISION 900.645 CLASS A RESTORATION OF GROWTH.
3. CLEAN SURFACES AND TACK COAT EDGES OF EXISTING PAVEMENT PRIOR TO PLACING NEW PAVEMENT.
4. PAVEMENT PLACED IN STREETS OR IN DRIVES SHALL BE PAID FOR UNDER PAY ITEM 406.25 BITUMINOUS CONCRETE PAVEMENT.

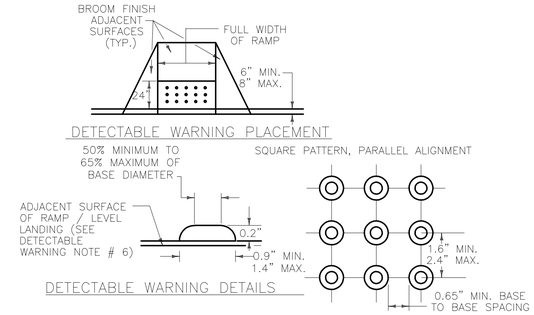

DETECTABLE WARNING NOTES:

1. CONCRETE ADJACENT TO ALL DETECTABLE WARNINGS SHALL HAVE A BROOM FINISH.
2. THE COLOR OF THE DETECTABLE WARNING SHALL PROVIDE A VISUAL CONTRAST TO THE SURROUNDING SURFACE AND SHALL BE SELECTED BY THE OWNER.
3. WHERE FEASIBLE, TRUNCATED DOMES SHALL BE ALIGNED ON A SQUARE GRID IN THE PREDOMINANT DIRECTION OF PEDESTRIAN TRAVEL.
4. WHERE A RAMP OR LEVEL LANDING MEETS A CURB RADIUS, ALIGN THE EDGE OF THE DETECTABLE WARNING AREA PARALLEL TO THE CURB TO THE MAXIMUM EXTENT FEASIBLE.
5. FOR SURFACE APPLIED TRUNCATED DOME PRODUCTS, A MAXIMUM 0.25" VERTICAL CHANGE IN ELEVATION IS ALLOWED. FOR CHANGES IN ELEVATION BETWEEN 0.25" AND 0.50", A BEVEL WITH A MAXIMUM 1:2 SLOPE IS REQUIRED. CHANGES IN ELEVATION GREATER THAN 0.50" MUST BE TREATED AS A RAMP– 8.3% MAXIMUM SLOPE.

DETECTABLE WARNING DETAIL

NOT TO SCALE

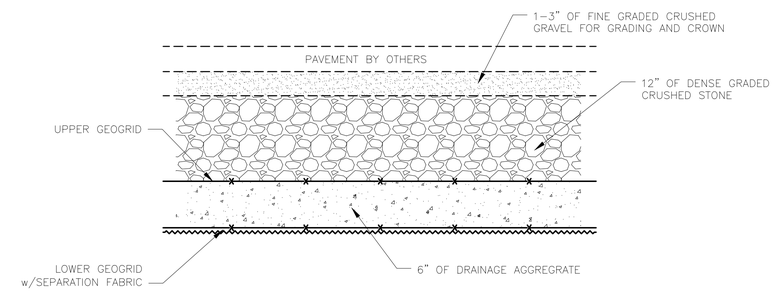

TYPICAL ROAD SECTION

NOT TO SCALE

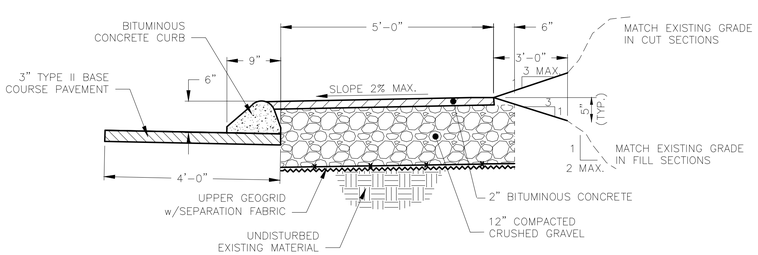

BITUMINOUS CONCRETE CURB AND SIDEWALK DETAIL

NOT TO SCALE

NOTES:

1. 4 FT WIDE STRIP OF 3" THICK BASE COURSE PAVEMENT TO BE INSTALLED PRIOR TO INSTALLING CURB. TO BE INCLUDED IN THE UNIT PRICE OF THE BITUMINOUS CONCRETE CURB.
2. CLEAN BASE PAVEMENT AND APPLY TACK COAT OF EMULSIFIED ASPHALT PRIOR TO INSTALLING CURB.
3. RESTORE ALL DISTURBED GRASS AREA TO CLASS A RESTORATION.

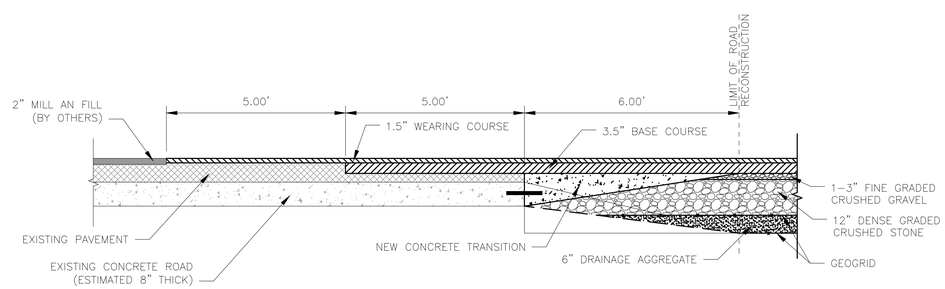

TYPICAL ROAD TRANSITION DETAIL

SCALE : 1" = 2'-0"

FINAL DESIGN SUBMITTAL

NOT FOR CONSTRUCTION

DUFRESNE GROUP
CONSULTING ENGINEERS
56 Main Street, Suite 200
Springfield, Vermont 05156
E-mail: info@dufresnegroup.com
Web: www.dufresnegroup.com
• • •
Springfield, VT • Tel: (802) 674-2904 Fax: (802) 674-2913
Barre, VT • Tel: (802) 479-3698
St. Johnsbury, VT • Tel: (802) 748-8605
Manchester, VT • Tel: (802) 768-8291
• • •
Dufresne Group is owned by Dufresne & Associates, PC

STATE OF VERMONT — ROBERT E. DUFRESNE — NO. 3834 — CIVIL — LICENSED PROFESSIONAL ENGINEER

2-6-17

REVISIONS

DATE	COMMENTS	BY

THIS DRAWING SHALL NOT BE REUSED OR ALTERED IN ANY WAY WITHOUT THE WRITTEN APPROVAL AND AUTHORITY OF DUFRESNE GROUP. ANY REVISIONS SHALL BE MADE BY DUFRESNE GROUP ©

NORTHFIELD STREET UTILITIES IMPROVEMENTS

STANDARD ROAD & SIDEWALK DETAILS

CITY OF MONTPELIER, VERMONT

Project #	8160003
Project Mgr.	R.E. DUFRESNE
Design by	B.L. BAKER
Drawn by	B.L. BAKER
Reviewed by	T.P. KNAPP
Approved by	R.E. DUFRESNE
Date	FEBRUARY 6, 2017
Scale	AS SHOWN

C22

FILE: R:\Montpelier VT\City of Montpelier\8160003 – Northfield Street Utilities\CAD\8160002 – Northfield Street Road & Sidewalk Details.dwg Feb 08, 2017 – 5:35pm

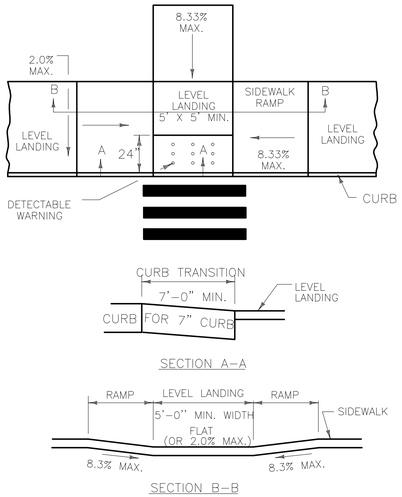

PERPENDICULAR SIDEWALK RAMP DETAIL

NOT TO SCALE

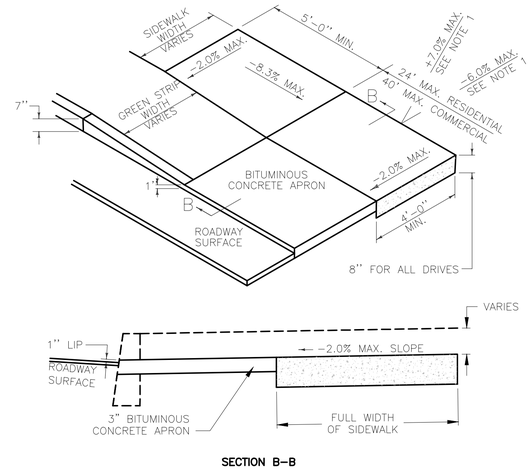

PARALLEL CROSSING WITH LANDING (TYPE 7)

NOT TO SCALE

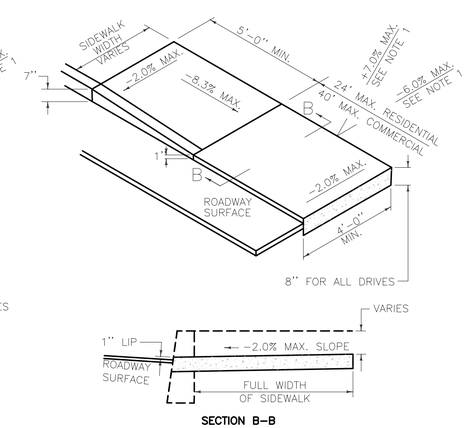

PARALLEL CROSSING WITH LANDING (TYPE 2)

NOT TO SCALE

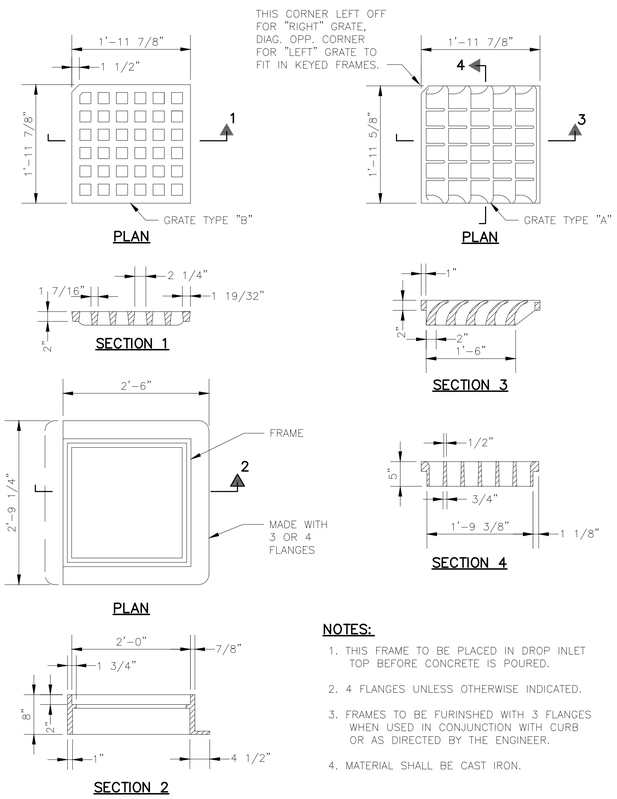

NOTES:

1. THIS FRAME TO BE PLACED IN DROP INLET TOP BEFORE CONCRETE IS POURED.
2. 4 FLANGES UNLESS OTHERWISE INDICATED.
3. FRAMES TO BE FURINSHED WITH 3 FLANGES WHEN USED IN CONJUNCTION WITH CURB OR AS DIRECTED BY THE ENGINEER.
4. MATERIAL SHALL BE CAST IRON.

CATCH BASIN FRAME AND GRATE DETAILS

NOT TO SCALE

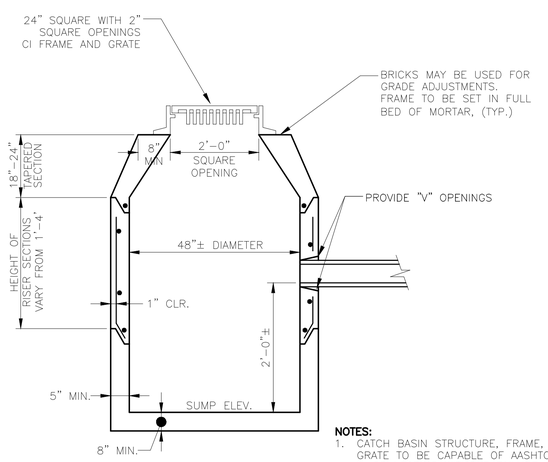

NOTES:

1. CATCH BASIN STRUCTURE, FRAME, AND GRATE TO BE CAPABLE OF AASHTO H-20 LOADING WITHOUT FAILURE.

PRECAST CONCRETE CATCH BASIN

NOT TO SCALE

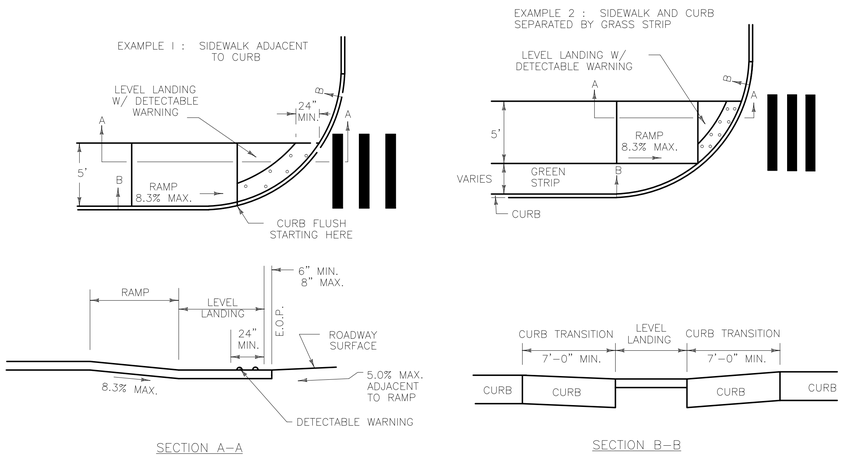

PARALLEL SIDEWALK RAMP DETAIL

NOT TO SCALE

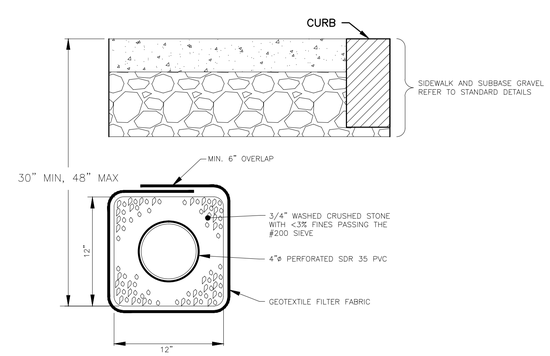

UNDERDRAIN DETAIL

NOT TO SCALE

FINAL DESIGN SUBMITTAL

NOT FOR CONSTRUCTION

DUFRESNE GROUP
CONSULTING ENGINEERS
56 Main Street, Suite 200
Springfield, Vermont 05156
E-mail: info@dufresnegroup.com
Web: www.dufresnegroup.com
• • •
Springfield, VT • Tel: (802) 674-2904 Fax: (802) 674-2913
Barre, VT • Tel: (802) 479-3698
St. Johnsbury, VT • Tel: (802) 748-8605
Manchester, VT • Tel: (802) 768-8291
• • •
Dufresne Group is owned by Dufresne & Associates, PC

STATE OF VERMONT — ROBERT E. DUFRESNE — NO. 3834 — CIVIL — LICENSED PROFESSIONAL ENGINEER

2-6-17

REVISIONS

DATE	COMMENTS	BY

THIS DRAWING SHALL NOT BE REUSED OR ALTERED IN ANY WAY WITHOUT THE WRITTEN APPROVAL AND AUTHORITY OF DUFRESNE GROUP. ANY REVISIONS SHALL BE MADE BY DUFRESNE GROUP ©

NORTHFIELD STREET UTILITIES IMPROVEMENTS

STANDARD ROAD & SIDEWALK DETAILS

CITY OF MONTPELIER, VERMONT

Project #	8160003
Project Mgr.	R.E. DUFRESNE
Design by	B.L. BAKER
Drawn by	B.L. BAKER
Reviewed by	T.P. KNAPP
Approved by	R.E. DUFRESNE
Date	FEBRUARY 6, 2017
Scale	AS SHOWN

C23

FILE: R:\Montpelier VT\City of Montpelier\8160003 - Northfield Street Utilities\CAD\8160002 - Northfield Street Road & Sidewalk Details.dwg Feb 08, 2017 - 5:35pm

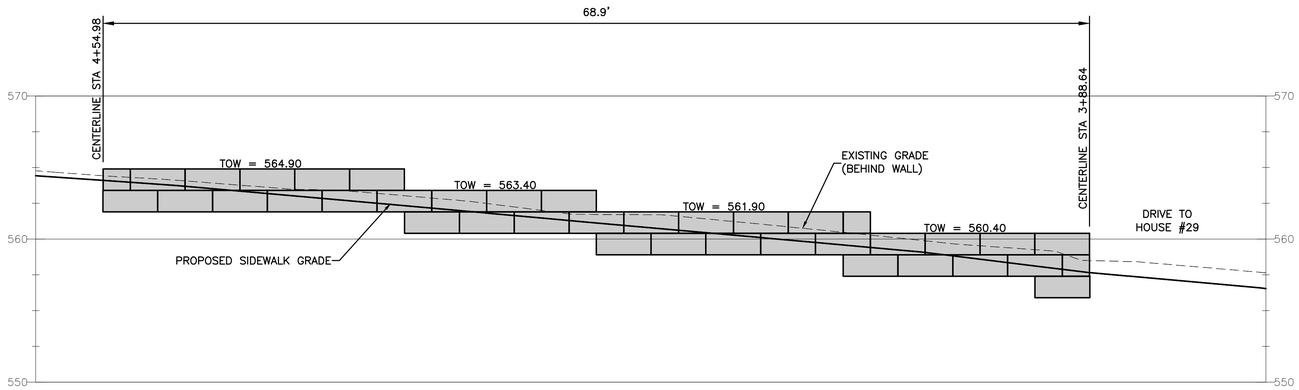

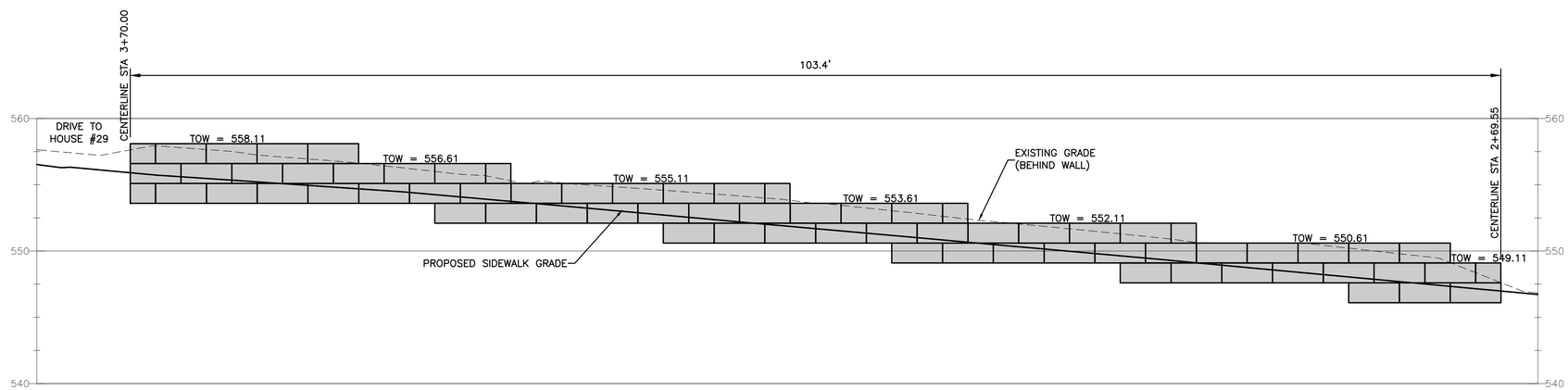

SEGMENTAL WALL ELEVATIONS
SCALE: 1" = 5'

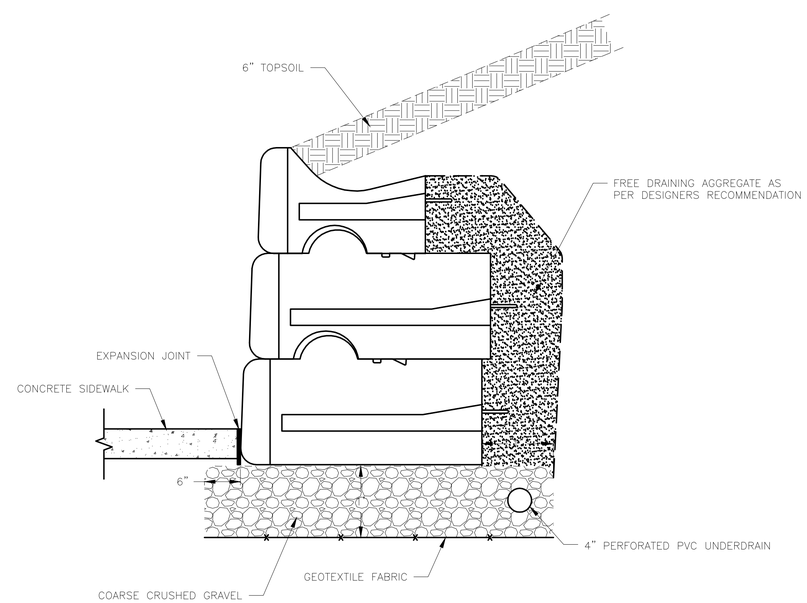

SEGMENTAL WALL DETAIL
SCALE: 1" = 1'-0"

FINAL DESIGN SUBMITTAL
NOT FOR CONSTRUCTION

DUFRESNE GROUP
CONSULTING ENGINEERS
56 Main Street, Suite 200
Springfield, Vermont 05156
E-mail: info@dufresnegroup.com
Web: www.dufresnegroup.com
• • •
Springfield, VT • Tel: (802) 674-2904 Fax: (802) 674-2913
Barre, VT • Tel: (802) 479-3698
St. Johnsbury, VT • Tel: (802) 748-8605
Manchester, VT • Tel: (802) 768-8291
• • •
Dufresne Group is owned by Dufresne & Associates, PC

STATE OF VERMONT
ROBERT E. DUFRESNE
NO. 3834
CIVIL
LICENSED PROFESSIONAL ENGINEER
2-6-17

REVISIONS

DATE	COMMENTS	BY

THIS DRAWING SHALL NOT BE REUSED OR ALTERED IN ANY WAY WITHOUT THE WRITTEN APPROVAL AND AUTHORITY OF DUFRESNE GROUP. ANY REVISIONS SHALL BE MADE BY DUFRESNE GROUP ©

NORTHFIELD STREET UTILITIES IMPROVEMENTS

RETAINING WALL ELEVATION AND DETAILS

CITY OF MONTPELIER, VERMONT

Project #	8160003
Project Mgr.	R.E. DUFRESNE
Design by	B.L. BAKER
Drawn by	B.L. BAKER
Reviewed by	T.P. KNAPP
Approved by	R.E. DUFRESNE
Date	FEBRUARY 6, 2017
Scale	AS SHOWN

C24

FILE: R:\Montpelier\VT\City of Montpelier\8160003 - Northfield Street Utilities\CAD\8160002 - Northfield Street Road & Sidewalk Details.dwg Feb 08, 2017 - 5:36pm

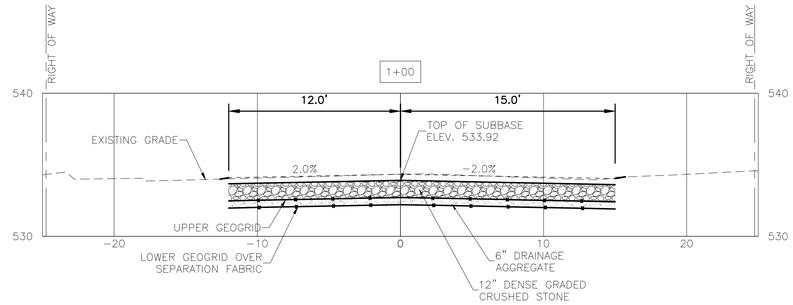

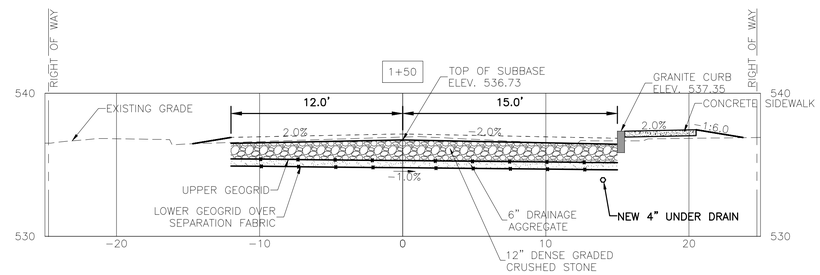

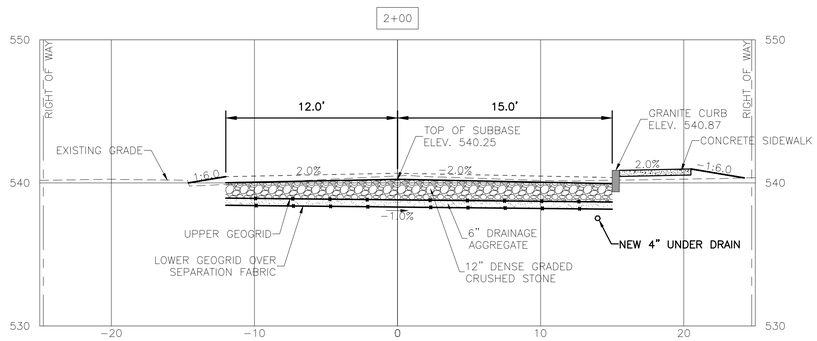

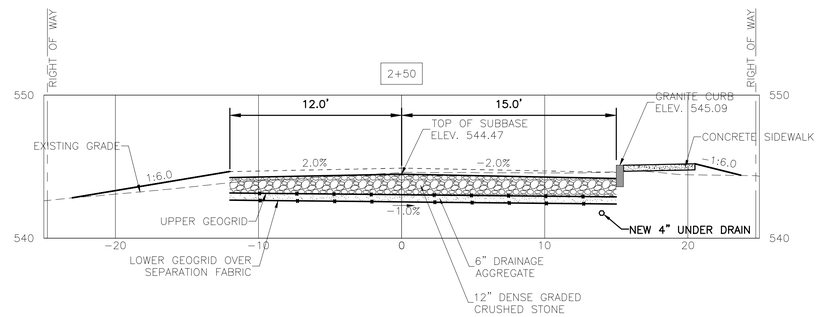

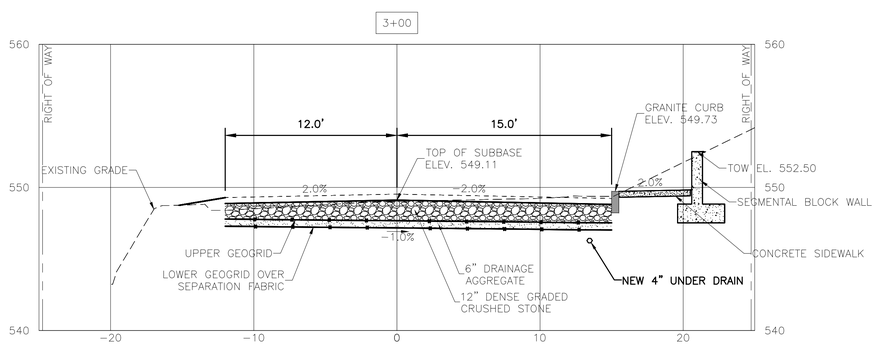

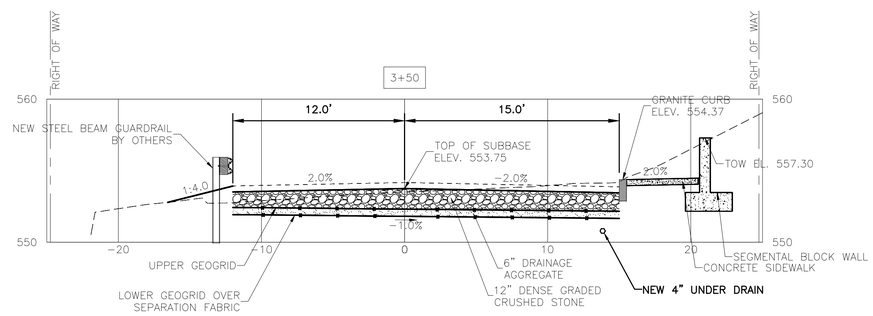

GRAPHIC SCALE

5 0 2.5 5 10 20

(IN FEET)

FINAL DESIGN
SUBMITTAL
NOT FOR CONSTRUCTION

DUFRESNE GROUP
CONSULTING ENGINEERS
56 Main Street, Suite 200
Springfield, Vermont 05156
E-mail: info@dufresnegroup.com
Web: www.dufresnegroup.com

Springfield, VT • Tel: (802) 674-2904 Fax: (802) 674-2913
Barre, VT • Tel: (802) 479-3698
St. Johnsbury, VT • Tel: (802) 748-8605
Manchester, VT • Tel: (802) 768-8291

Dufresne Group is owned by Dufresne & Associates, PC

STATE OF VERMONT
ROBERT E. DUFRESNE
NO. 3834
CIVIL
LICENSED PROFESSIONAL ENGINEER

2-6-17

REVISIONS

DATE	COMMENTS	BY

THIS DRAWING SHALL NOT BE REUSED OR ALTERED IN ANY WAY WITHOUT THE WRITTEN APPROVAL AND AUTHORITY OF DUFRESNE GROUP. ANY REVISIONS SHALL BE MADE BY DUFRESNE GROUP ©

NORTHFIELD STREET UTILITIES IMPROVEMENTS

ROAD & SIDEWALK
CROSS SECTIONS
STATION 1+00 TO 3+50

CITY OF MONTPELIER, VERMONT

Project #	8160003
Project Mgr.	R.E. DUFRESNE
Design by	B.L. BAKER
Drawn by	B.L. BAKER
Reviewed by	T.P. KNAPP
Approved by	R.E. DUFRESNE
Date	FEBRUARY 6, 2017
Scale	AS SHOWN

C25

FILE: R:\Montpelier VT\City of Montpelier\8160003 - Northfield Street Utilities\CAD\8160002 - Northfield Street Cross Sections.dwg Feb 08, 2017 - 5:41pm

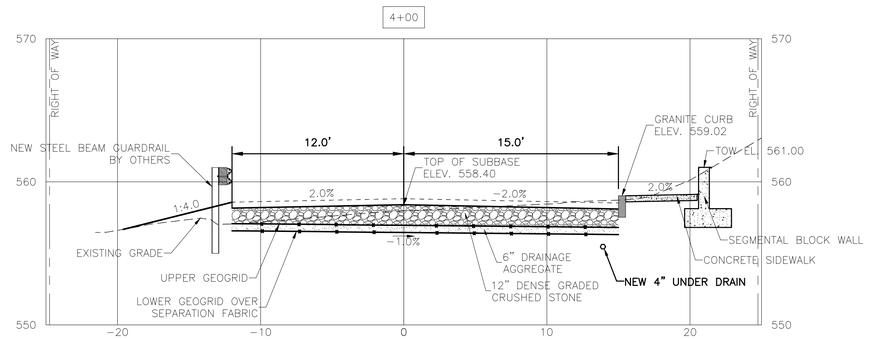

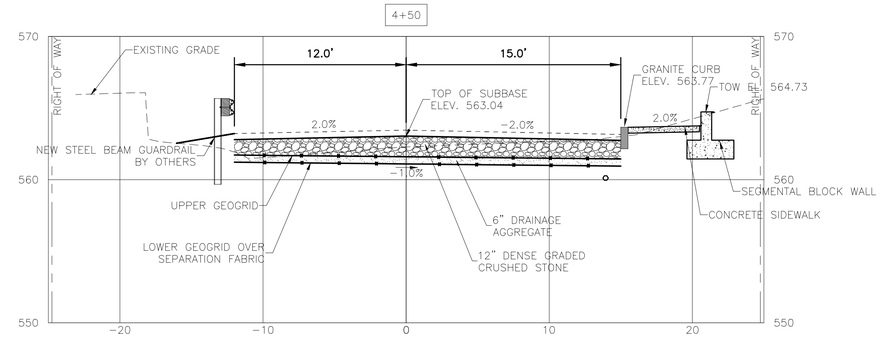

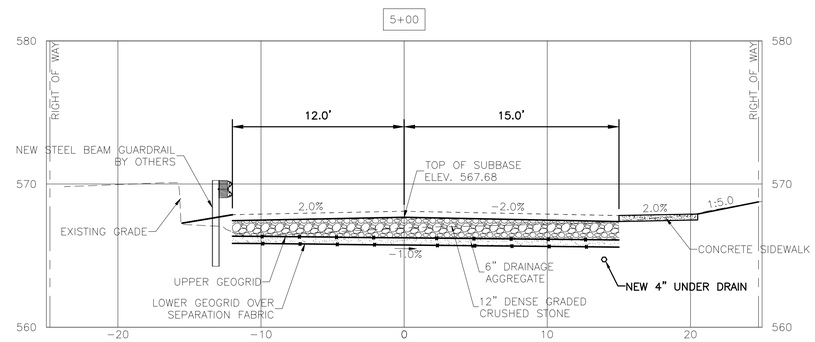

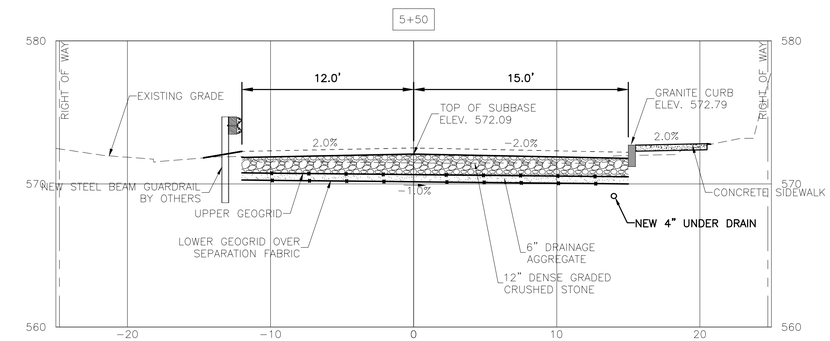

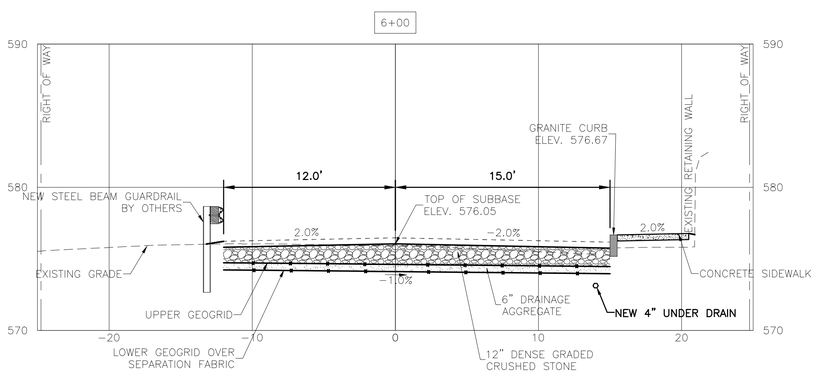

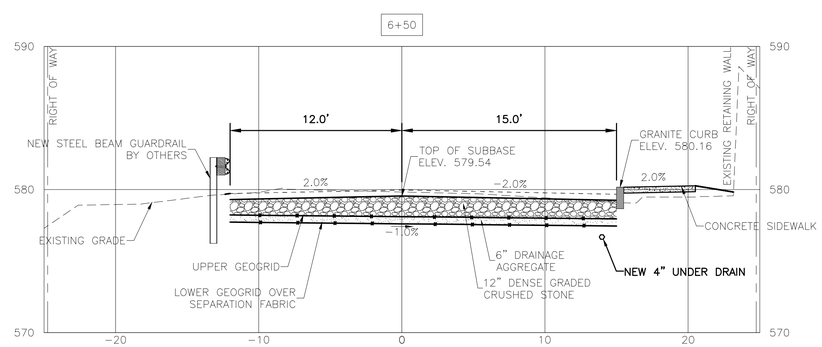

GRAPHIC SCALE

5 0 2.5 5 10 20

(IN FEET)

FINAL DESIGN SUBMITTAL
NOT FOR CONSTRUCTION

DUFRESNE GROUP
CONSULTING ENGINEERS
56 Main Street, Suite 200
Springfield, Vermont 05156
E-mail: info@dufresnegroup.com
Web: www.dufresnegroup.com
• • •
Springfield, VT • Tel: (802) 674-2904 Fax: (802) 674-2913
Barre, VT • Tel: (802) 479-3698
St. Johnsbury, VT • Tel: (802) 748-8605
Manchester, VT • Tel: (802) 768-8291
• • •
Dufresne Group is owned by Dufresne & Associates, PC

STATE OF VERMONT
ROBERT E. DUFRESNE
NO. 3834
CIVIL
LICENSED PROFESSIONAL ENGINEER

2-6-17

REVISIONS

DATE	COMMENTS	BY

THIS DRAWING SHALL NOT BE REUSED OR ALTERED IN ANY WAY WITHOUT THE WRITTEN APPROVAL AND AUTHORITY OF DUFRESNE GROUP. ANY REVISIONS SHALL BE MADE BY DUFRESNE GROUP ©

NORTHFIELD STREET UTILITIES IMPROVEMENTS

ROAD & SIDEWALK CROSS SECTIONS STATION 4+00 TO 6+50

CITY OF MONTPELIER, VERMONT

Project #	8160003
Project Mgr.	R.E. DUFRESNE
Design by	B.L. BAKER
Drawn by	B.L. BAKER
Reviewed by	T.P. KNAPP
Approved by	R.E. DUFRESNE
Date	FEBRUARY 6, 2017
Scale	AS SHOWN

C26

FILE: R:\Montpelier VT\City of Montpelier\8160003 - Northfield Street Utilities\CAD\8160002 - Northfield Street Cross Sections.dwg Feb 08, 2017 - 5:41pm

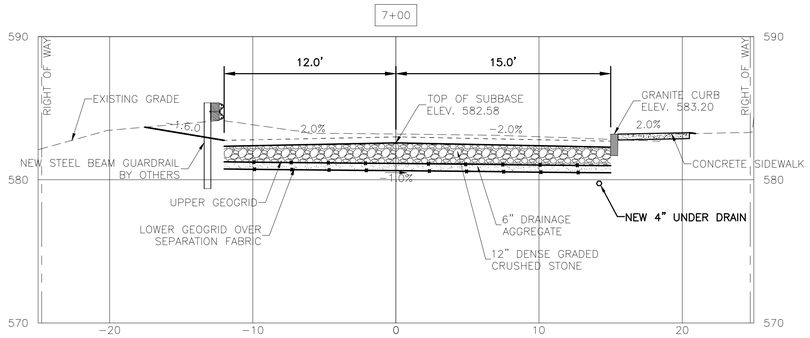

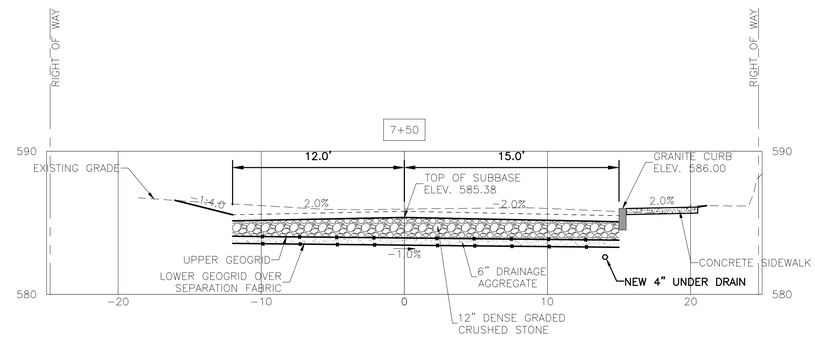

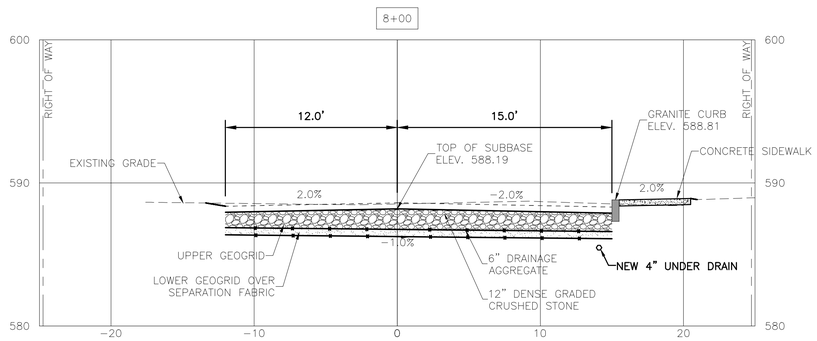

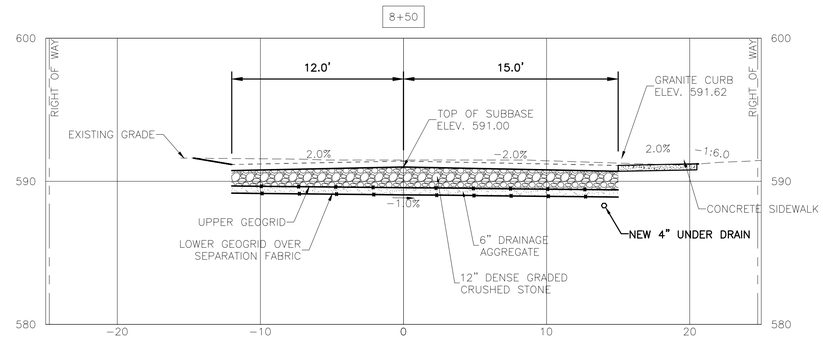

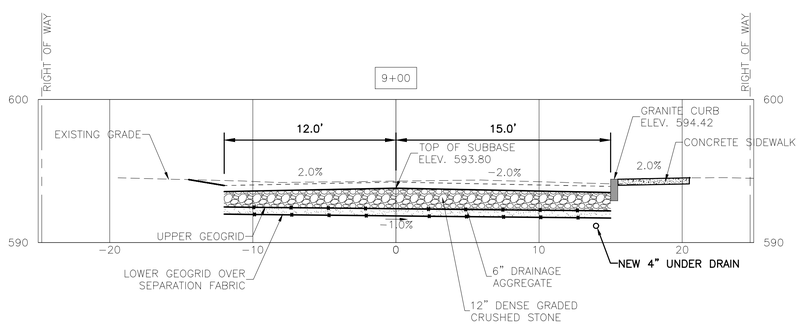

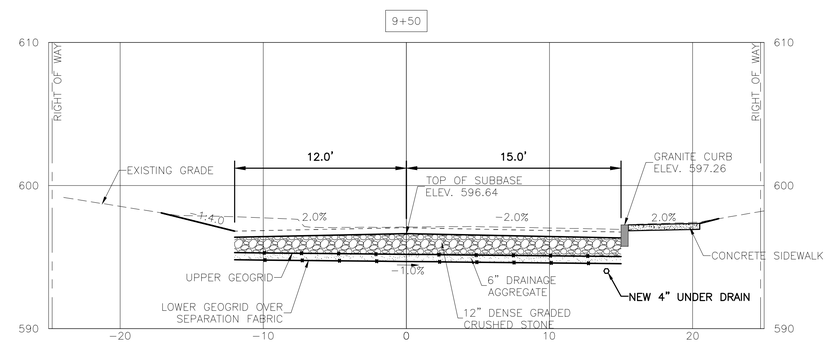

GRAPHIC SCALE

5 0 2.5 5 10 20

(IN FEET)

FINAL DESIGN SUBMITTAL
NOT FOR CONSTRUCTION

DUFRESNE GROUP
CONSULTING ENGINEERS
56 Main Street, Suite 200
Springfield, Vermont 05156
E-mail: info@dufresnegroup.com
Web: www.dufresnegroup.com
• • •
Springfield, VT • Tel: (802) 674-2904 Fax: (802) 674-2913
Barre, VT • Tel: (802) 479-3698
St. Johnsbury, VT • Tel: (802) 748-8605
Manchester, VT • Tel: (802) 768-8291
• • •
Dufresne Group is owned by Dufresne & Associates, PC

STATE OF VERMONT
ROBERT E. DUFRESNE
NO. 3834
CIVIL
LICENSED PROFESSIONAL ENGINEER

2-6-17

REVISIONS

DATE	COMMENTS	BY

THIS DRAWING SHALL NOT BE REUSED OR ALTERED IN ANY WAY WITHOUT THE WRITTEN APPROVAL AND AUTHORITY OF DUFRESNE GROUP. ANY REVISIONS SHALL BE MADE BY DUFRESNE GROUP ©

NORTHFIELD STREET UTILITIES IMPROVEMENTS

ROAD & SIDEWALK
CROSS SECTIONS
STATION 7+00 TO 9+50

CITY OF MONTPELIER, VERMONT

Project #	8160003
Project Mgr.	R.E. DUFRESNE
Design by	B.L. BAKER
Drawn by	B.L. BAKER
Reviewed by	T.P. KNAPP
Approved by	R.E. DUFRESNE
Date	FEBRUARY 6, 2017
Scale	AS SHOWN

C27

FILE: R:\Montpelier VT\City of Montpelier\8160003 - Northfield Street Utilities\CAD\8160002 - Northfield Street Cross Sections.dwg Feb 08, 2017 - 5:41pm

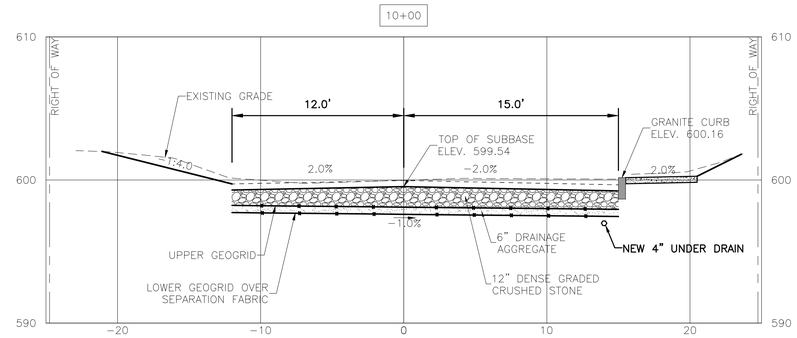

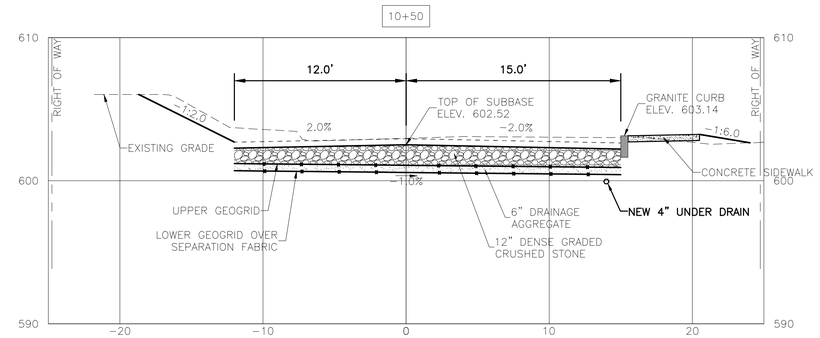

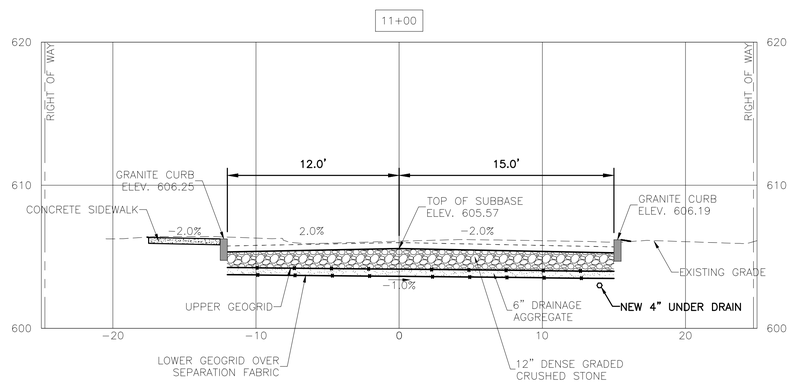

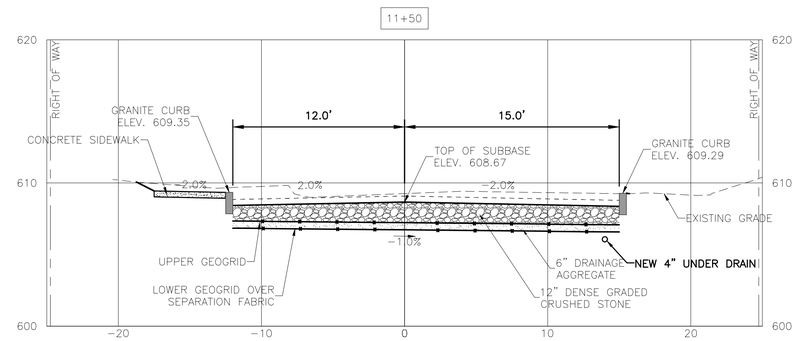

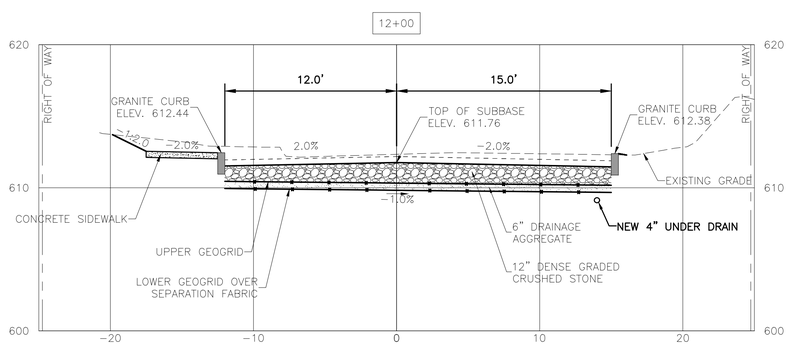

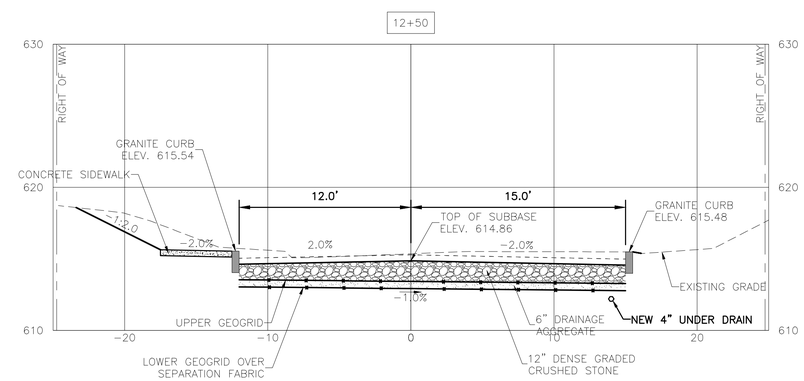

GRAPHIC SCALE

5 0 2.5 5 10 20

(IN FEET)

FINAL DESIGN
SUBMITTAL
NOT FOR CONSTRUCTION

DUFRESNE GROUP
CONSULTING ENGINEERS
56 Main Street, Suite 200
Springfield, Vermont 05156
Email: info@dufresnegroup.com
Web: www.dufresnegroup.com
• • •
Springfield, VT • Tel: (802) 674-2904 Fax: (802) 674-2913
Barre, VT • Tel: (802) 479-3698
St. Johnsbury, VT • Tel: (802) 748-8605
Manchester, VT • Tel: (802) 768-8291
• • •
Dufresne Group is owned by Dufresne & Associates, PC

STATE OF VERMONT
ROBERT E. DUFRESNE
NO. 3834
CIVIL
LICENSED PROFESSIONAL ENGINEER

2-6-17

REVISIONS

DATE	COMMENTS	BY

THIS DRAWING SHALL NOT BE REUSED OR ALTERED IN ANY WAY WITHOUT THE WRITTEN APPROVAL AND AUTHORITY OF DUFRESNE GROUP. ANY REVISIONS SHALL BE MADE BY DUFRESNE GROUP ©

NORTHFIELD STREET UTILITIES IMPROVEMENTS

ROAD & SIDEWALK
CROSS SECTIONS
STATION 10+00 TO 12+50

CITY OF MONTPELIER, VERMONT

Project #	8160003
Project Mgr.	R.E. DUFRESNE
Design by	B.L. BAKER
Drawn by	B.L. BAKER
Reviewed by	T.P. KNAPP
Approved by	R.E. DUFRESNE
Date	FEBRUARY 6, 2017
Scale	AS SHOWN

C28

FILE: R:\Montpelier VT\City of Montpelier\8160003 - Northfield Street Utilities\CAD\8160002 - Northfield Street Cross Sections.dwg Feb 08, 2017 - 5:41pm

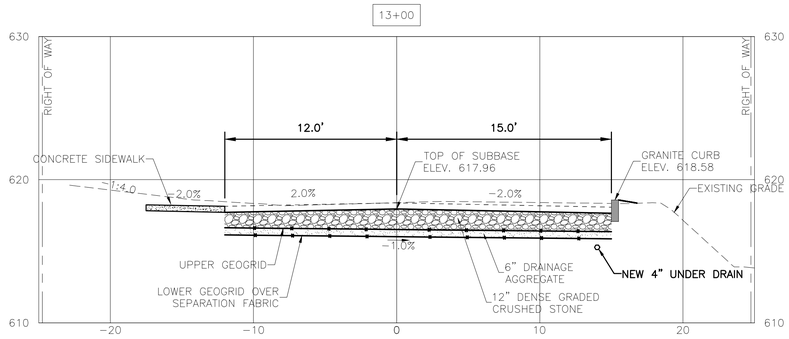

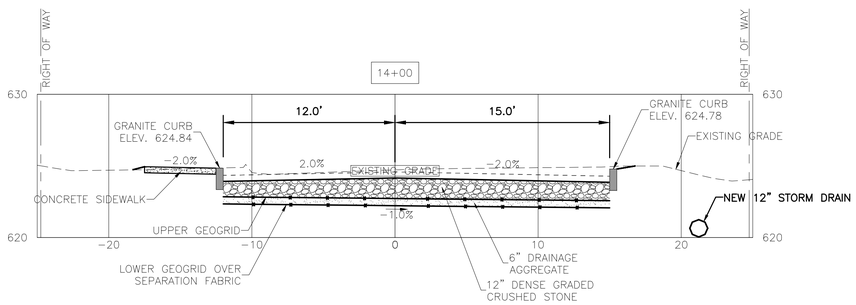

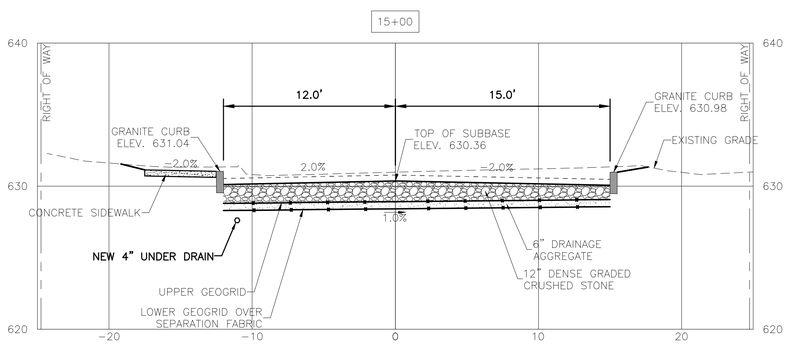

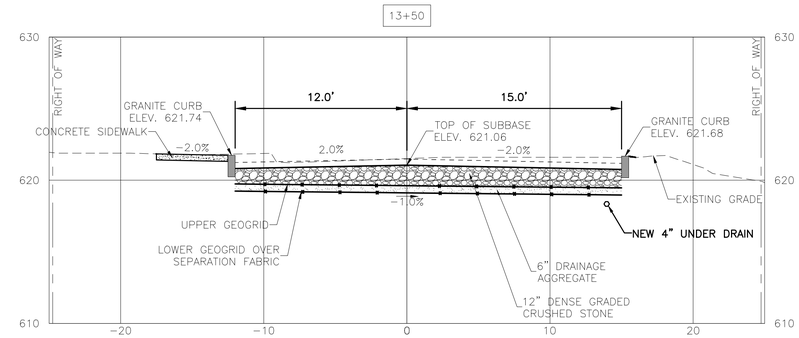

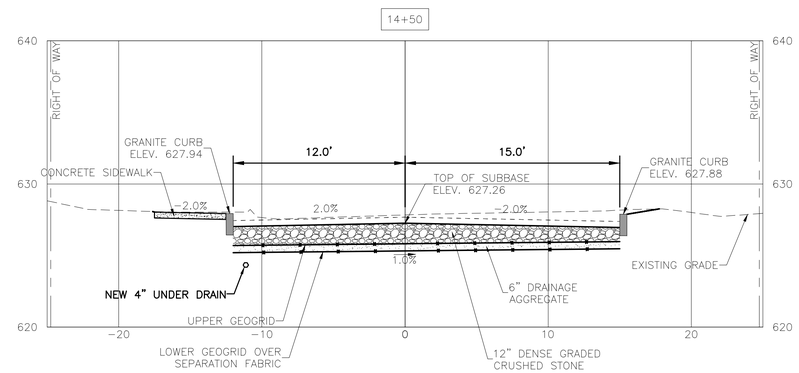

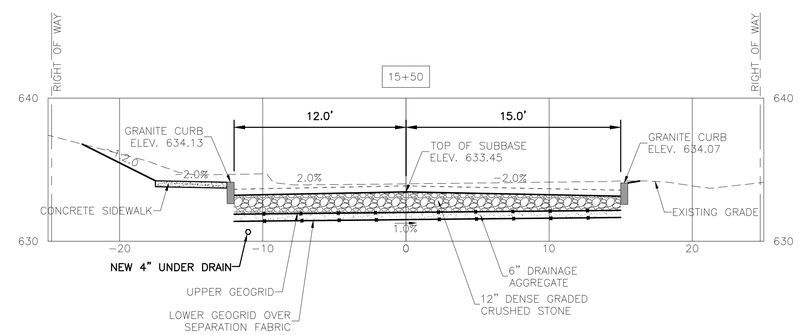

GRAPHIC SCALE

5 0 2.5 5 10 20

(IN FEET)

FINAL DESIGN
SUBMITTAL
NOT FOR CONSTRUCTION

DUFRESNE GROUP
CONSULTING ENGINEERS
56 Main Street, Suite 200
Springfield, Vermont 05156
Email: info@dufresnegroup.com
Web: www.dufresnegroup.com
• • •
Springfield, VT • Tel: (802) 674-2904 Fax: (802) 674-2913
Barre, VT • Tel: (802) 479-3698
St. Johnsbury, VT • Tel: (802) 748-8605
Manchester, VT • Tel: (802) 768-8291
• • •
Dufresne Group is owned by Dufresne & Associates, PC

STATE OF VERMONT
ROBERT E. DUFRESNE
NO. 3834
CIVIL
LICENSED PROFESSIONAL ENGINEER

2-6-17

REVISIONS

DATE	COMMENTS	BY

THIS DRAWING SHALL NOT BE REUSED OR ALTERED IN ANY WAY WITHOUT THE WRITTEN APPROVAL AND AUTHORITY OF DUFRESNE GROUP. ANY REVISIONS SHALL BE MADE BY DUFRESNE GROUP ©

NORTHFIELD STREET UTILITIES IMPROVEMENTS

ROAD & SIDEWALK
CROSS SECTIONS
STATION 13+00 TO 15+50

CITY OF MONTPELIER, VERMONT

Project #	8160003
Project Mgr.	R.E. DUFRESNE
Design by	B.L. BAKER
Drawn by	B.L. BAKER
Reviewed by	T.P. KNAPP
Approved by	R.E. DUFRESNE
Date	FEBRUARY 6, 2017
Scale	AS SHOWN

C29

FILE: R:\Montpelier VT\City of Montpelier\8160003 - Northfield Street Utilities\CAD\8160002 - Northfield Street Cross Sections.dwg Feb 08, 2017 - 5:42pm

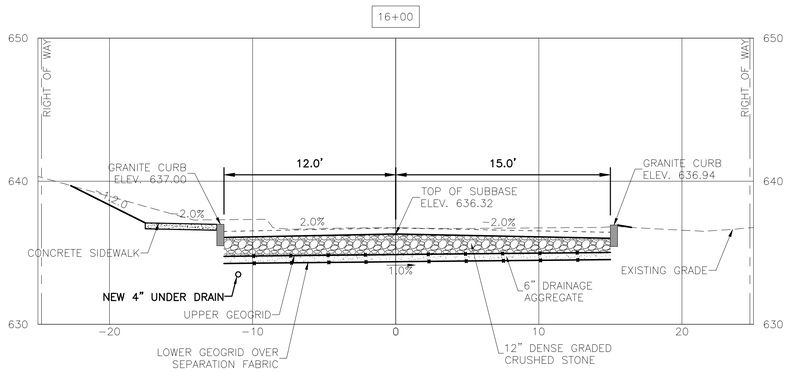

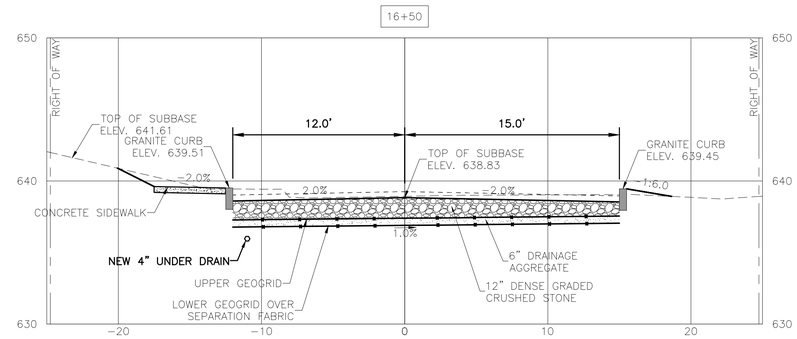

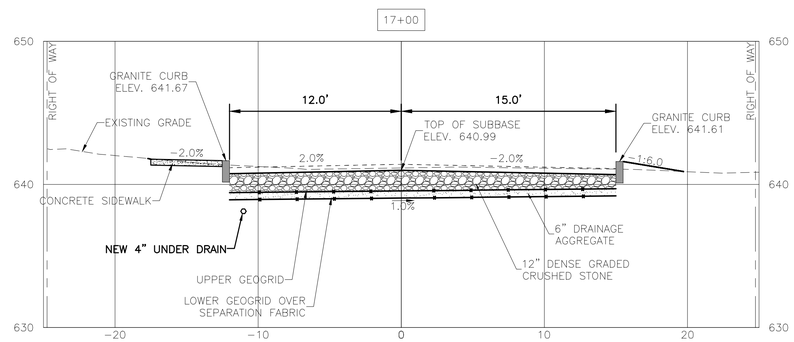

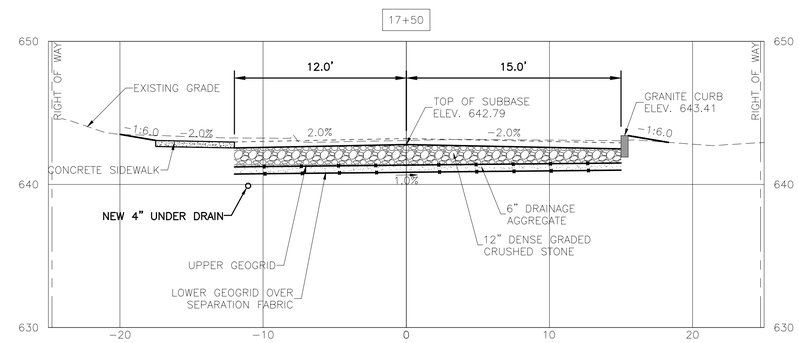

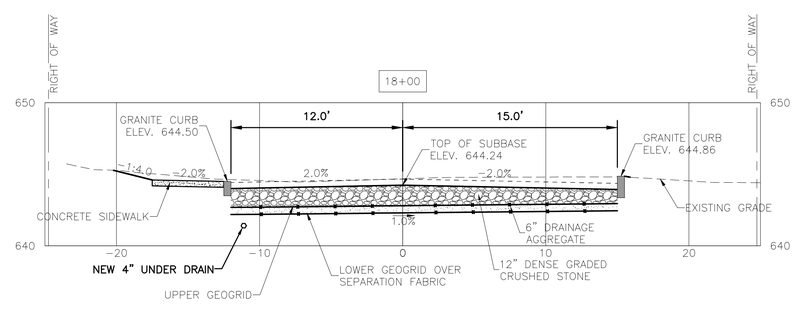

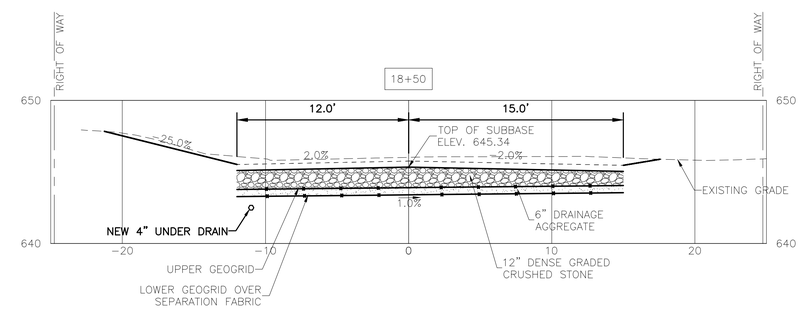

GRAPHIC SCALE

5 0 2.5 5 10 20

(IN FEET)

FINAL DESIGN
SUBMITTAL
NOT FOR CONSTRUCTION

DUFRESNE GROUP
CONSULTING ENGINEERS
56 Main Street, Suite 200
Springfield, Vermont 05156
E-mail: info@dufresnegroup.com
Web: www.dufresnegroup.com
• • •
Springfield, VT • Tel: (802) 674-2904 Fax: (802) 674-2913
Barre, VT • Tel: (802) 479-3698
St. Johnsbury, VT • Tel: (802) 748-8605
Manchester, VT • Tel: (802) 768-8291
• • •
Dufresne Group is owned by Dufresne & Associates, PC

STATE OF VERMONT
ROBERT E. DUFRESNE
NO. 3834
CIVIL
LICENSED PROFESSIONAL ENGINEER

2-6-17

REVISIONS

DATE	COMMENTS	BY

THIS DRAWING SHALL NOT BE REUSED OR ALTERED IN ANY WAY WITHOUT THE WRITTEN APPROVAL AND AUTHORITY OF DUFRESNE GROUP. ANY REVISIONS SHALL BE MADE BY DUFRESNE GROUP ©

NORTHFIELD STREET UTILITIES IMPROVEMENTS

ROAD & SIDEWALK
CROSS SECTIONS
STATION 16+00 TO 18+50

CITY OF MONTPELIER, VERMONT

Project #	8160003
Project Mgr.	R.E. DUFRESNE
Design by	B.L. BAKER
Drawn by	B.L. BAKER
Reviewed by	T.P. KNAPP
Approved by	R.E. DUFRESNE
Date	FEBRUARY 6, 2017
Scale	AS SHOWN

C30

FILE: R:\Montpelier VT\City of Montpelier\8160003 - Northfield Street Utilities\CAD\8160002 - Northfield Street Cross Sections.dwg Feb 08, 2017 - 5:42pm

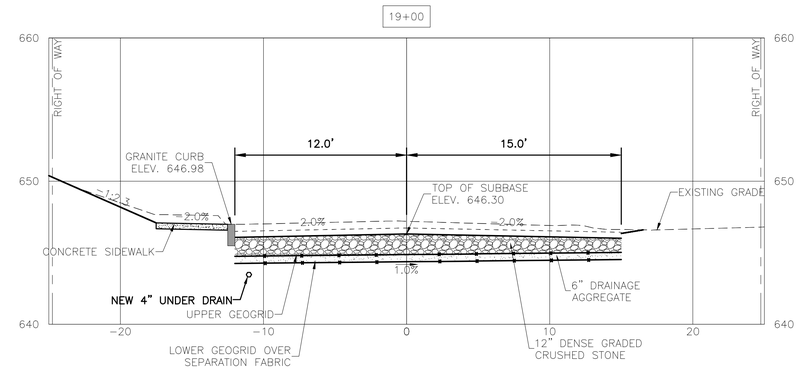

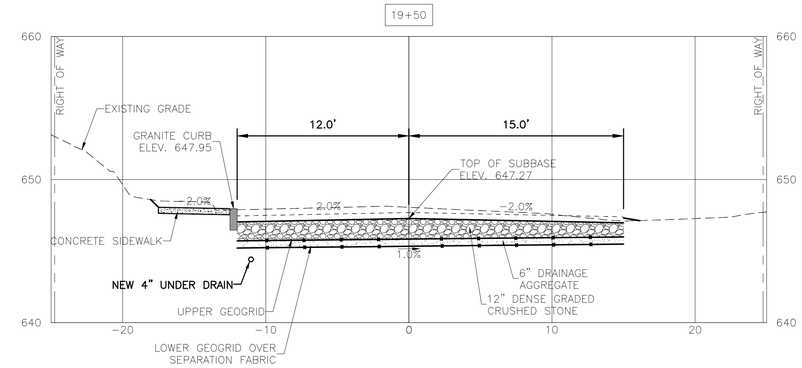

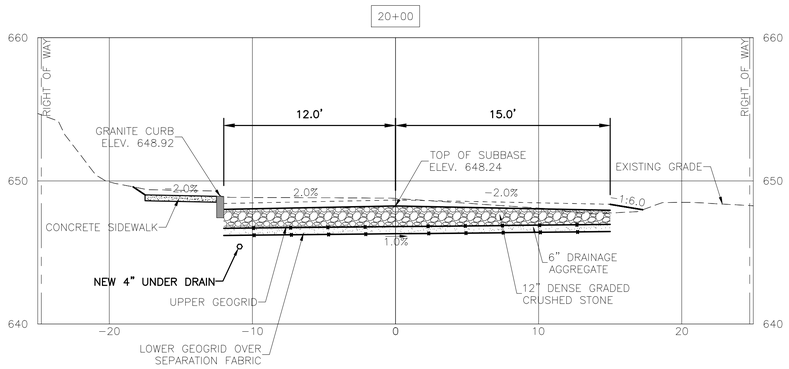

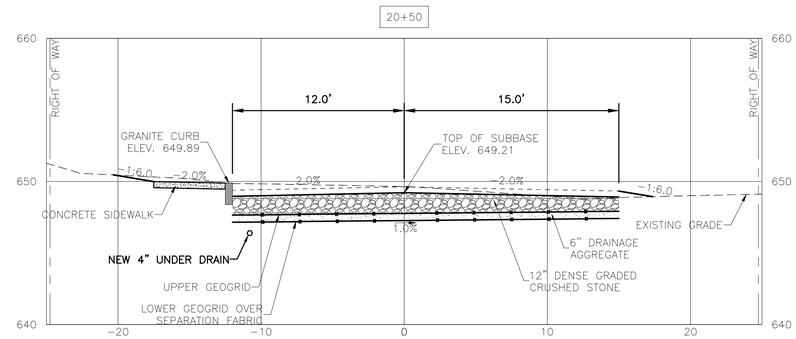

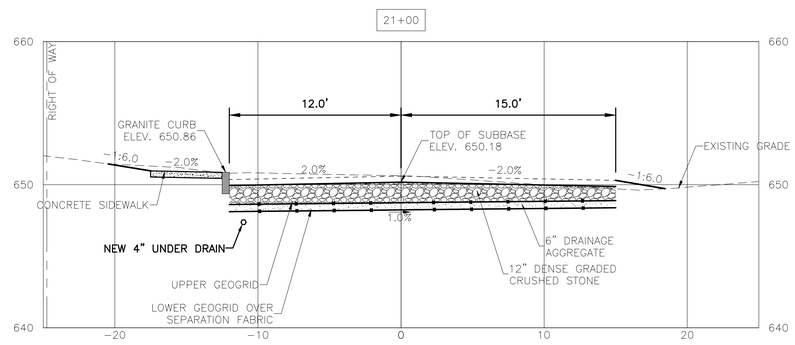

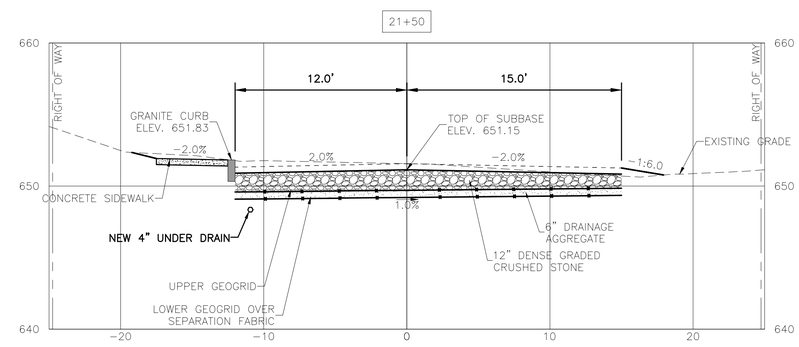

GRAPHIC SCALE

5 0 2.5 5 10 20

(IN FEET)

FINAL DESIGN
SUBMITTAL
NOT FOR CONSTRUCTION

DUFRESNE GROUP
CONSULTING ENGINEERS
56 Main Street, Suite 200
Springfield, Vermont 05156
E-mail: info@dufresnegroup.com
Web: www.dufresnegroup.com
• • •
Springfield, VT • Tel: (802) 674-2904 Fax: (802) 674-2913
Barre, VT • Tel: (802) 479-3698
St. Johnsbury, VT • Tel: (802) 748-8605
Manchester, VT • Tel: (802) 768-8291
• • •
Dufresne Group is owned by Dufresne & Associates, PC

STATE OF VERMONT
ROBERT E. DUFRESNE
NO. 3834
CIVIL
LICENSED PROFESSIONAL ENGINEER

2-6-17

REVISIONS

DATE	COMMENTS	BY

THIS DRAWING SHALL NOT BE REUSED OR ALTERED IN ANY WAY WITHOUT THE WRITTEN APPROVAL AND AUTHORITY OF DUFRESNE GROUP. ANY REVISIONS SHALL BE MADE BY DUFRESNE GROUP ©

NORTHFIELD STREET UTILITIES IMPROVEMENTS

ROAD & SIDEWALK CROSS SECTIONS STATION 19+00 TO 21+50

CITY OF MONTPELIER, VERMONT

Project #	8160003
Project Mgr.	R.E. DUFRESNE
Design by	B.L. BAKER
Drawn by	B.L. BAKER
Reviewed by	T.P. KNAPP
Approved by	R.E. DUFRESNE
Date	FEBRUARY 6, 2017
Scale	AS SHOWN

C31

FILE: R:\Montpelier VT\City of Montpelier\8160003 - Northfield Street Utilities\CAD\8160003 - Northfield Street Cross Sections.dwg Feb 08, 2017 - 5:42pm

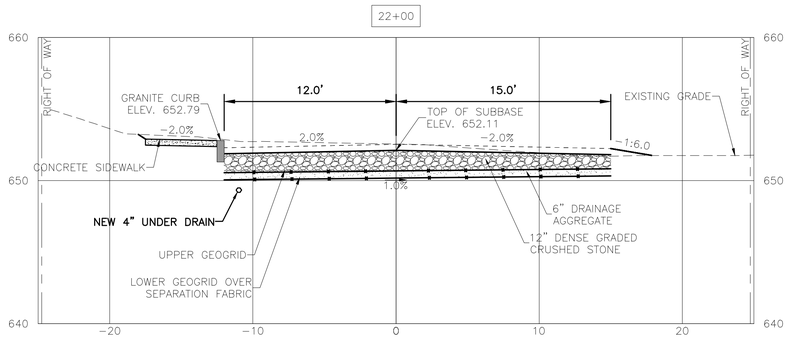

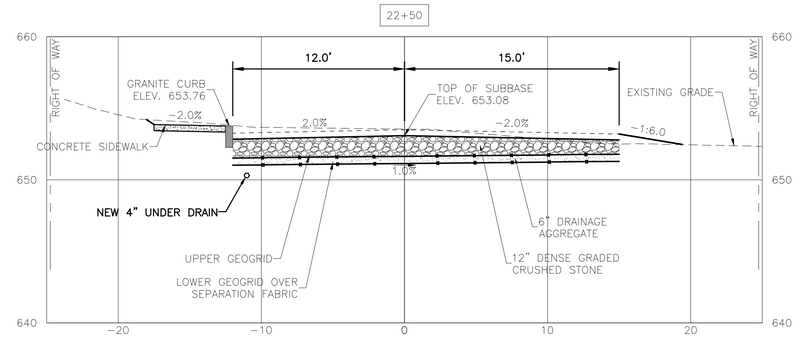

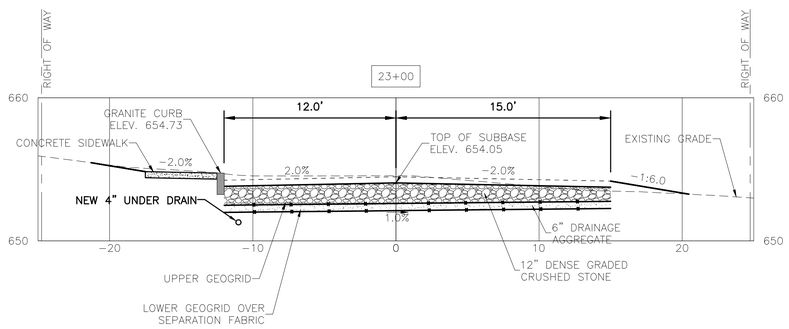

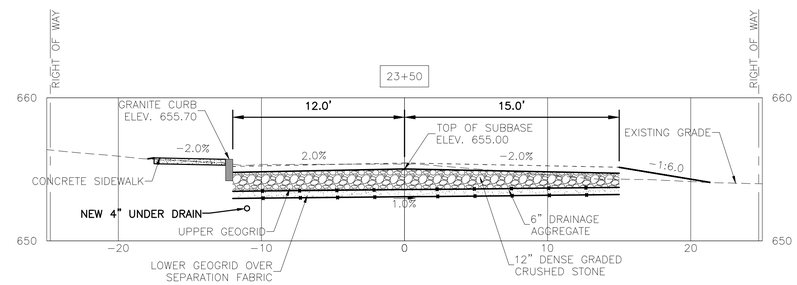

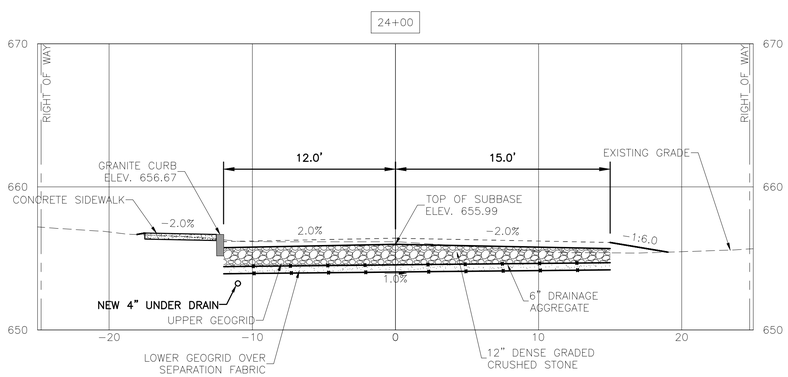

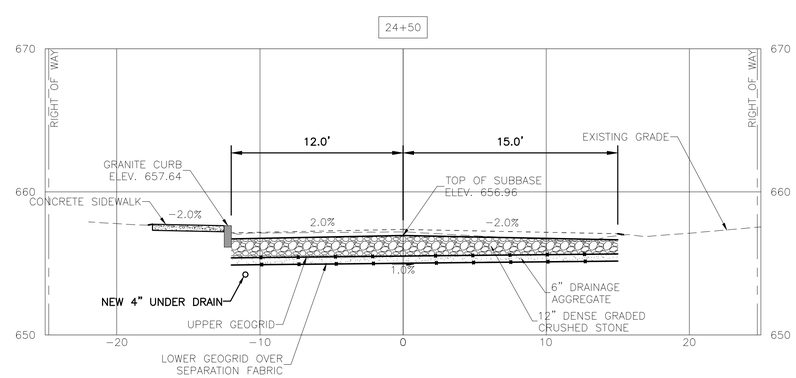

GRAPHIC SCALE

5 0 2.5 5 10 20

(IN FEET)

FINAL DESIGN SUBMITTAL

NOT FOR CONSTRUCTION

DUFRESNE GROUP
CONSULTING ENGINEERS
56 Main Street, Suite 200
Springfield, Vermont 05156
E-mail: info@dufresnegroup.com
Web: www.dufresnegroup.com

Springfield, VT • Tel: (802) 674-2904 Fax: (802) 674-2913
Barre, VT • Tel: (802) 479-3698
St. Johnsbury, VT • Tel: (802) 748-8605
Manchester, VT • Tel: (802) 768-8291

Dufresne Group is owned by Dufresne & Associates, PC

STATE OF VERMONT ROBERT E. DUFRESNE NO. 3834 CIVIL LICENSED PROFESSIONAL ENGINEER

2-6-17

REVISIONS

DATE	COMMENTS	BY

THIS DRAWING SHALL NOT BE REUSED OR ALTERED IN ANY WAY WITHOUT THE WRITTEN APPROVAL AND AUTHORITY OF DUFRESNE GROUP. ANY REVISIONS SHALL BE MADE BY DUFRESNE GROUP ©

NORTHFIELD STREET UTILITIES IMPROVEMENTS

ROAD & SIDEWALK CROSS SECTIONS STATION 22+00 TO 24+50

CITY OF MONTPELIER, VERMONT

Project #	8160003
Project Mgr.	R.E. DUFRESNE
Design by	B.L. BAKER
Drawn by	B.L. BAKER
Reviewed by	T.P. KNAPP
Approved by	R.E. DUFRESNE
Date	FEBRUARY 6, 2017
Scale	AS SHOWN

C32

FILE: R:\Montpelier VT\City of Montpelier\8160003 - Northfield Street Utilities\CAD\8160002 - Northfield Street Cross Sections.dwg Feb 08, 2017 - 5:42pm

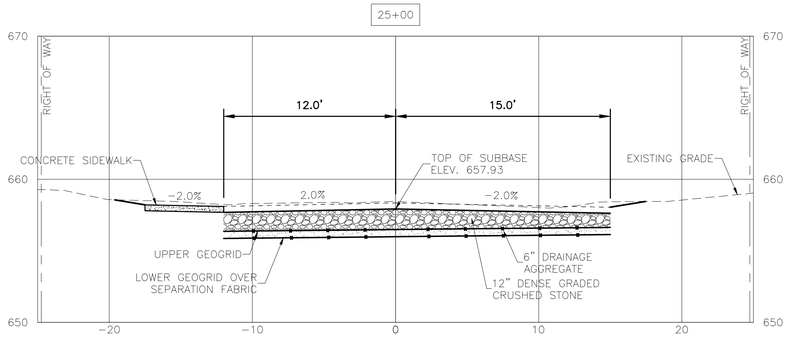

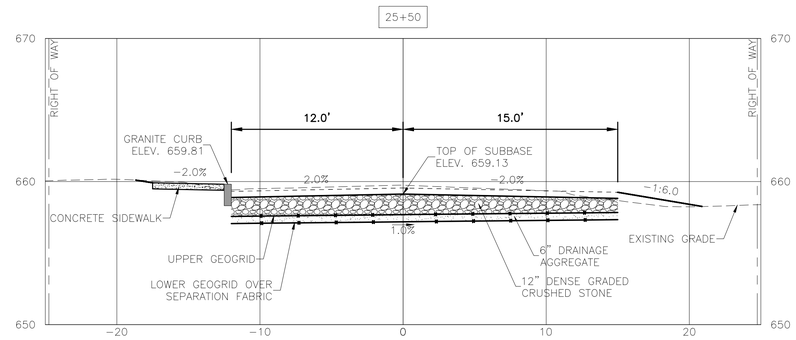

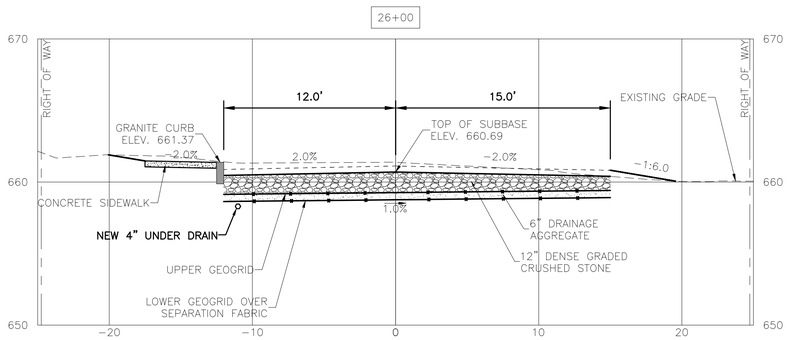

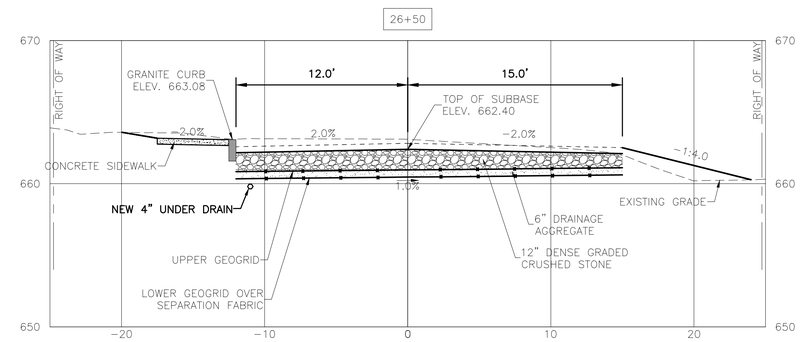

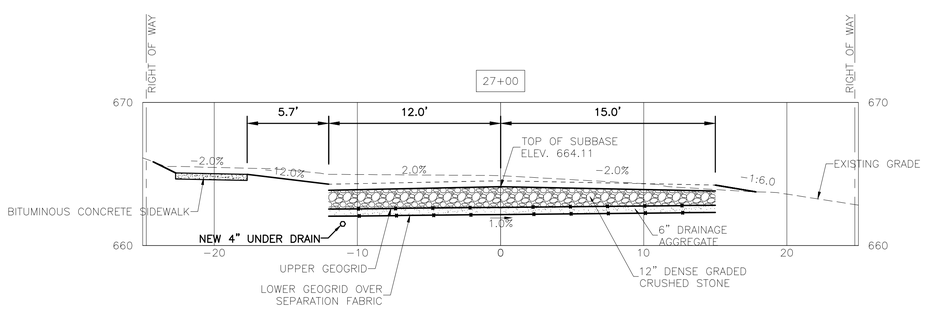

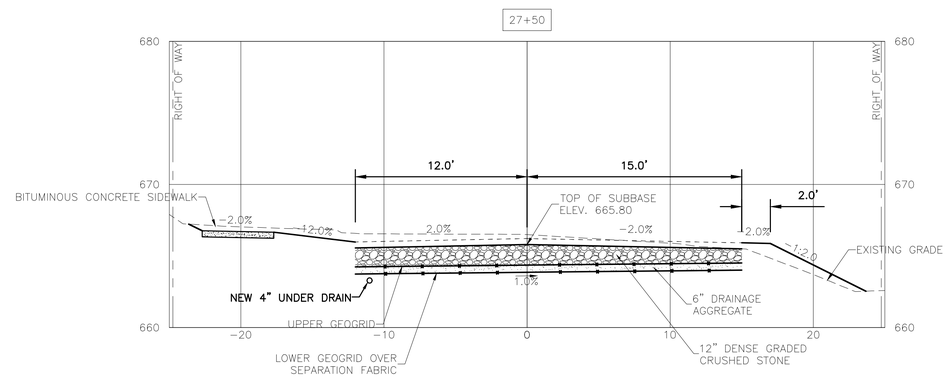

GRAPHIC SCALE

5 0 2.5 5 10 20

(IN FEET)

FINAL DESIGN
SUBMITTAL
NOT FOR CONSTRUCTION

DUFRESNE GROUP
CONSULTING ENGINEERS
56 Main Street, Suite 200
Springfield, Vermont 05156
E-mail: info@dufresnegroup.com
Web: www.dufresnegroup.com

Springfield, VT • Tel: (802) 674-2904 Fax: (802) 674-2913
Barre, VT • Tel: (802) 479-3698
St. Johnsbury, VT • Tel: (802) 748-8605
Manchester, VT • Tel: (802) 768-8291

Dufresne Group is owned by Dufresne & Associates, PC

STATE OF VERMONT
REGISTERED PROFESSIONAL ENGINEER
NO. 3834
CIVIL
LICENSED
PROFESSIONAL ENGINEER
2-6-17

REVISIONS

DATE	COMMENTS	BY

THIS DRAWING SHALL NOT BE REUSED OR ALTERED IN ANY WAY WITHOUT THE WRITTEN APPROVAL AND AUTHORITY OF DUFRESNE GROUP. ANY REVISIONS SHALL BE MADE BY DUFRESNE GROUP ©

NORTHFIELD STREET UTILITIES IMPROVEMENTS

ROAD & SIDEWALK
CROSS SECTIONS
STATION 25+00 TO 27+50

CITY OF MONTPELIER, VERMONT

Project #	8160003
Project Mgr.	R.E. DUFRESNE
Design by	B.L. BAKER
Drawn by	B.L. BAKER
Reviewed by	T.P. KNAPP
Approved by	R.E. DUFRESNE
Date	FEBRUARY 6, 2017
Scale	AS SHOWN

C33

FILE: R:\Montpelier VT\City of Montpelier\8160003 - Northfield Street Utilities\CAD\8160002 - Northfield Street Cross Sections.dwg Feb 08, 2017 - 5:42pm

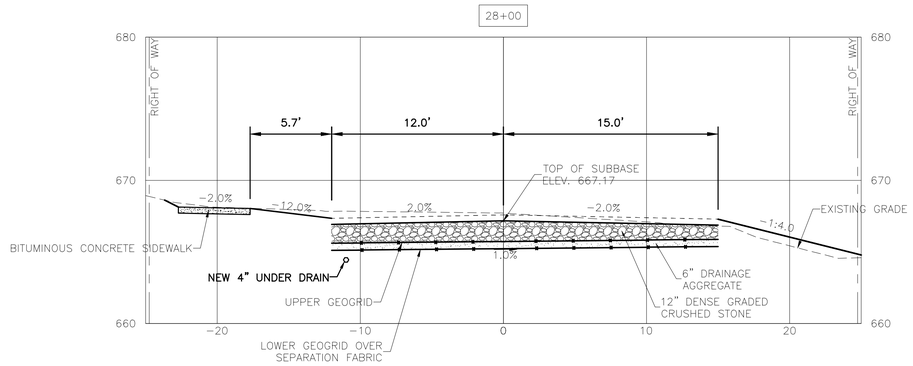

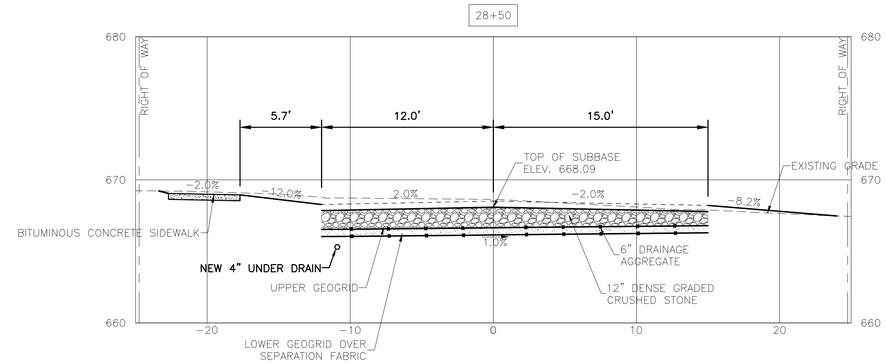

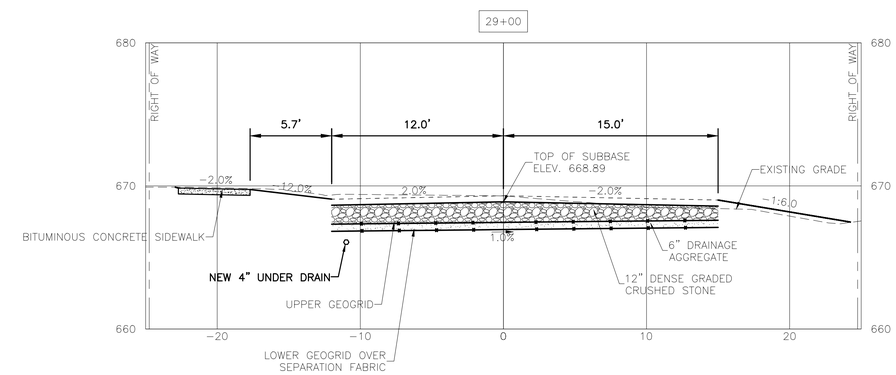

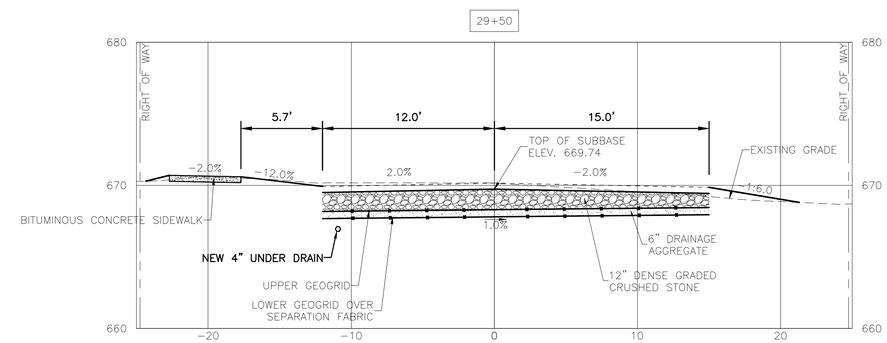

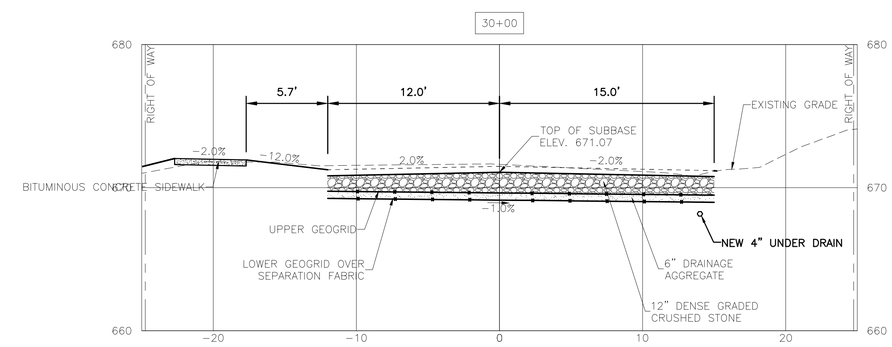

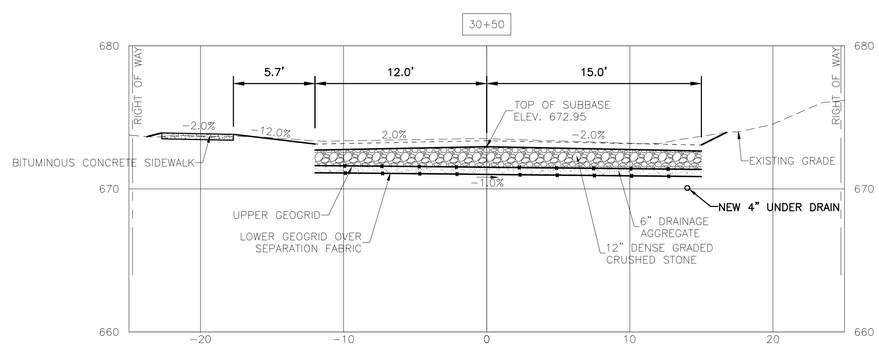

GRAPHIC SCALE

5 0 2.5 5 10 20

(IN FEET)

FINAL DESIGN
SUBMITTAL
NOT FOR CONSTRUCTION

DUFRESNE GROUP
CONSULTING ENGINEERS
56 Main Street, Suite 200
Springfield, Vermont 05156
E-mail: info@dufresnegroup.com
Web: www.dufresnegroup.com
• • •
Springfield, VT • Tel: (802) 674-2904 Fax: (802) 674-2913
Barre, VT • Tel: (802) 479-3698
St. Johnsbury, VT • Tel: (802) 748-8605
Manchester, VT • Tel: (802) 768-8291
• • •
Dufresne Group is owned by Dufresne & Associates, PC

STATE OF VERMONT
ROBERT E. DUFRESNE
NO. 3834
CIVIL
LICENSED PROFESSIONAL ENGINEER

2-6-17

REVISIONS

DATE	COMMENTS	BY

THIS DRAWING SHALL NOT BE REUSED OR ALTERED IN ANY WAY WITHOUT THE WRITTEN APPROVAL AND AUTHORITY OF DUFRESNE GROUP. ANY REVISIONS SHALL BE MADE BY DUFRESNE GROUP ©

NORTHFIELD STREET UTILITIES IMPROVEMENTS

ROAD & SIDEWALK
CROSS SECTIONS
STATION 28+00 TO 30+50

CITY OF MONTPELIER, VERMONT

Project #	8160003
Project Mgr.	R.E. DUFRESNE
Design by	B.L. BAKER
Drawn by	B.L. BAKER
Reviewed by	T.P. KNAPP
Approved by	R.E. DUFRESNE
Date	FEBRUARY 6, 2017
Scale	AS SHOWN

C34

FILE: R:\Montpelier VT\City of Montpelier\8160003 - Northfield Street Utilities\CAD\8160002 - Northfield Street Cross Sections.dwg Feb 08, 2017 - 5:42pm

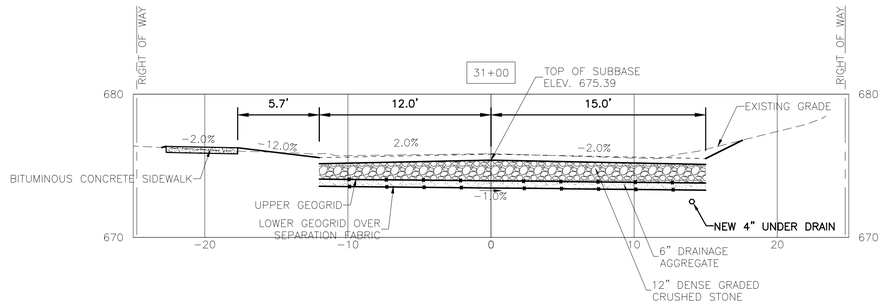

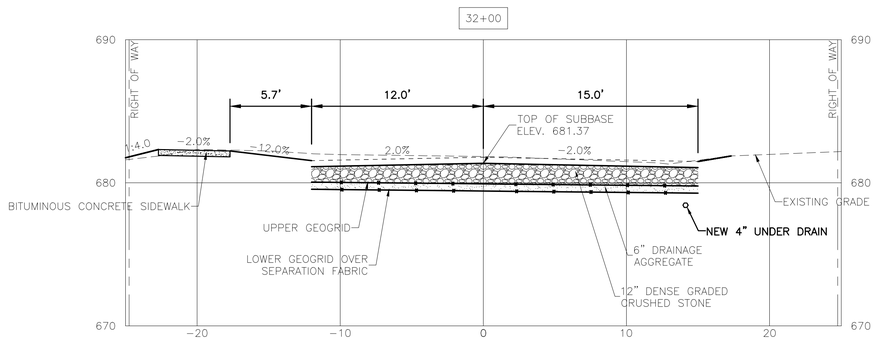

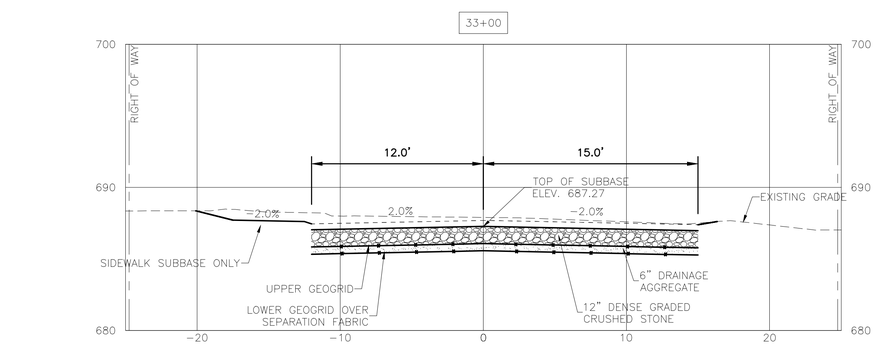

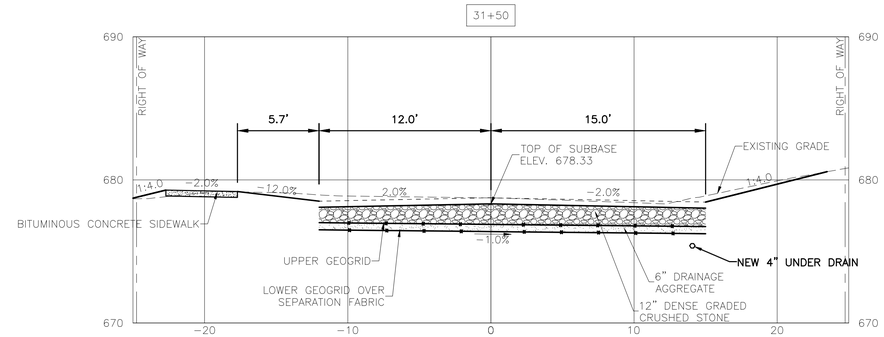

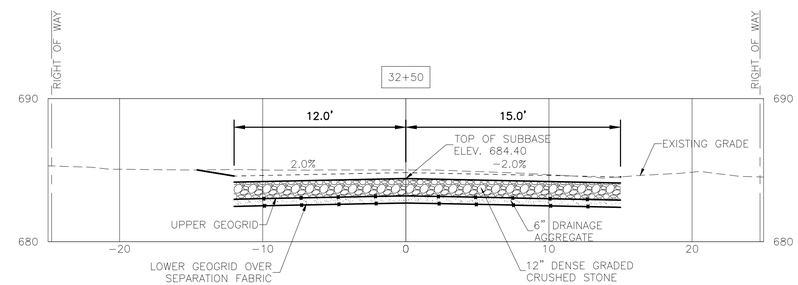

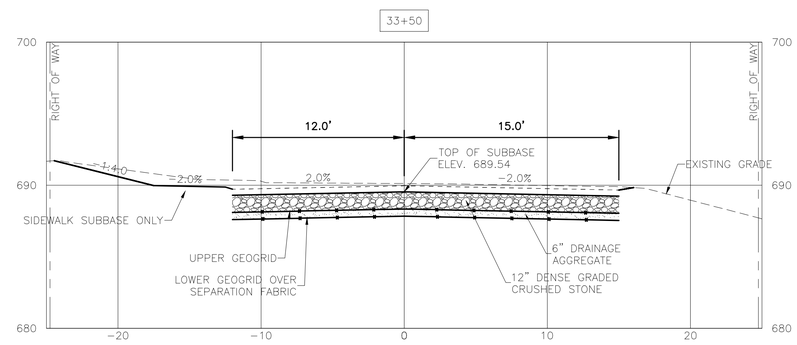

GRAPHIC SCALE

5 0 2.5 5 10 20

(IN FEET)

FINAL DESIGN
SUBMITTAL
NOT FOR CONSTRUCTION

DUFRESNE GROUP
CONSULTING ENGINEERS
56 Main Street, Suite 200
Springfield, Vermont 05156
E-mail: info@dufresnegroup.com
Web: www.dufresnegroup.com

Springfield, VT • Tel: (802) 674-2904 Fax: (802) 674-2913
Barre, VT • Tel: (802) 479-3698
St. Johnsbury, VT • Tel: (802) 748-8605
Manchester, VT • Tel: (802) 768-8291

Dufresne Group is owned by Dufresne & Associates, PC

STATE OF VERMONT
ROBERT E. DUFRESNE
NO. 3834
CIVIL
LICENSED PROFESSIONAL ENGINEER

2-6-17

REVISIONS

DATE	COMMENTS	BY

THIS DRAWING SHALL NOT BE REUSED OR ALTERED IN ANY WAY WITHOUT THE WRITTEN APPROVAL AND AUTHORITY OF DUFRESNE GROUP. ANY REVISIONS SHALL BE MADE BY DUFRESNE GROUP ©

NORTHFIELD STREET UTILITIES IMPROVEMENTS

ROAD & SIDEWALK
CROSS SECTIONS
STATION 31+00 TO 33+50

CITY OF MONTPELIER, VERMONT

Project #	8160003
Project Mgr.	R.E. DUFRESNE
Design by	B.L. BAKER
Drawn by	B.L. BAKER
Reviewed by	T.P. KNAPP
Approved by	R.E. DUFRESNE
Date	FEBRUARY 6, 2017
Scale	AS SHOWN

C35

FILE: R:\Montpelier VT\City of Montpelier\8160003 - Northfield Street Utilities\CAD\8160002 - Northfield Street Cross Sections.dwg Feb 08, 2017 - 5:43pm

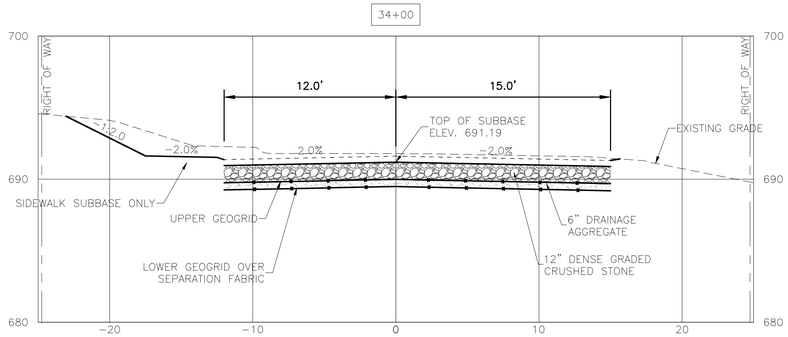

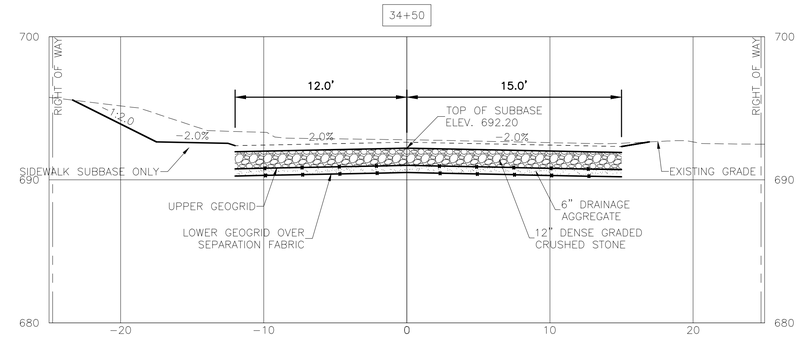

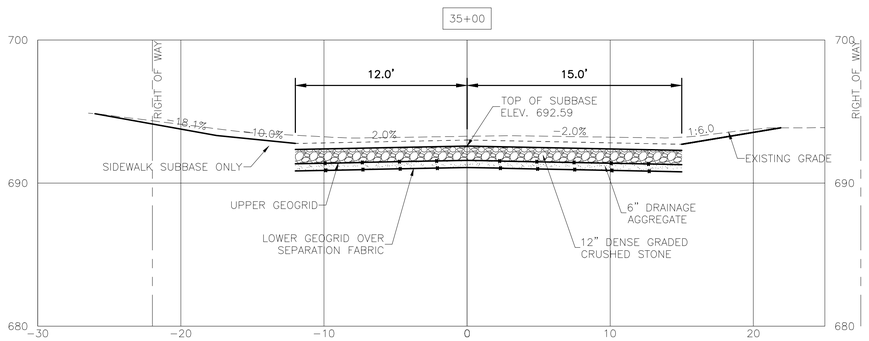

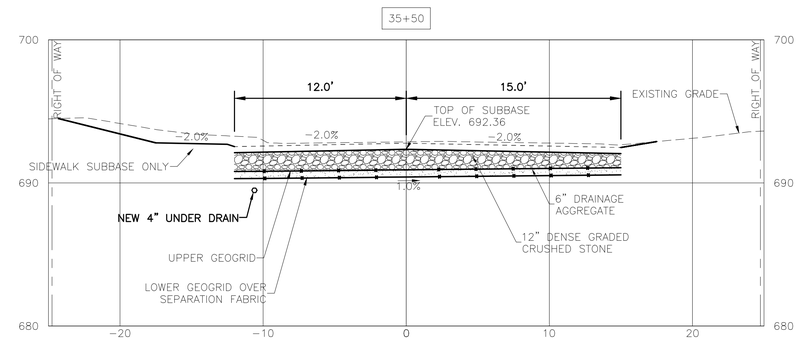

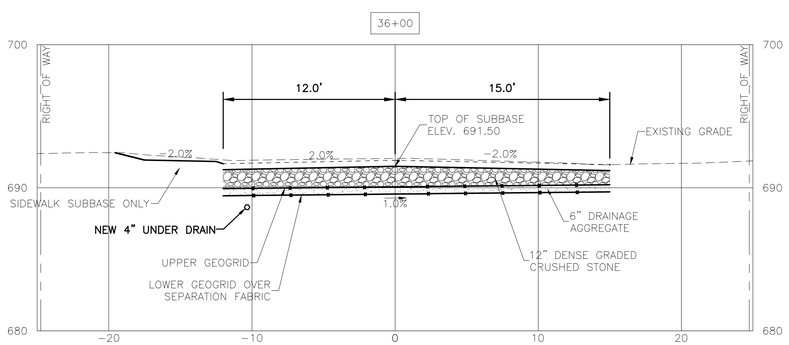

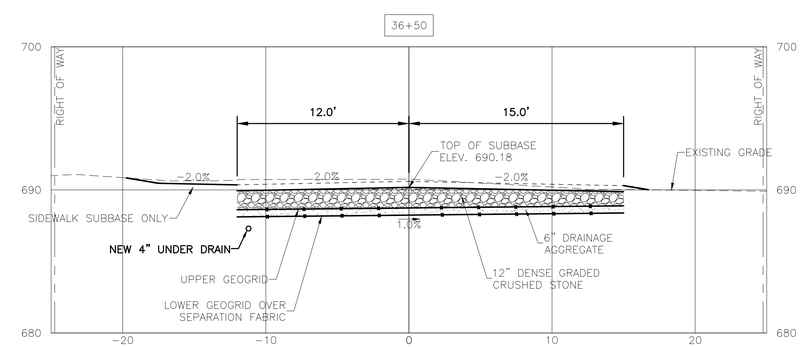

GRAPHIC SCALE

5 0 2.5 5 10 20

(IN FEET)

FINAL DESIGN
SUBMITTAL
NOT FOR CONSTRUCTION

DUFRESNE GROUP
CONSULTING ENGINEERS
56 Main Street, Suite 200
Springfield, Vermont 05156
Email: info@dufresnegroup.com
Web: www.dufresnegroup.com
• • •
Springfield, VT • Tel: (802) 674-2904 Fax: (802) 674-2913
Barre, VT • Tel: (802) 479-3698
St. Johnsbury, VT • Tel: (802) 748-8605
Manchester, VT • Tel: (802) 768-8291
• • •
Dufresne Group is owned by Dufresne & Associates, PC

STATE OF VERMONT
ROBERT E. DUFRESNE
NO. 3834
CIVIL
LICENSED PROFESSIONAL ENGINEER

2-6-17

REVISIONS

DATE	COMMENTS	BY

THIS DRAWING SHALL NOT BE REUSED OR ALTERED IN ANY WAY WITHOUT THE WRITTEN APPROVAL AND AUTHORITY OF DUFRESNE GROUP. ANY REVISIONS SHALL BE MADE BY DUFRESNE GROUP ©

NORTHFIELD STREET UTILITIES IMPROVEMENTS

ROAD & SIDEWALK
CROSS SECTIONS
STATION 34+00 TO 36+50

CITY OF MONTPELIER, VERMONT

Project #	8160003
Project Mgr.	R.E. DUFRESNE
Design by	B.L. BAKER
Drawn by	B.L. BAKER
Reviewed by	T.P. KNAPP
Approved by	R.E. DUFRESNE
Date	FEBRUARY 6, 2017
Scale	AS SHOWN

C36

FILE: R:\Montpelier VT\City of Montpelier\8160003 - Northfield Street Utilities\CAD\8160002 - Northfield Street Cross Sections.dwg Feb 08, 2017 - 5:43pm

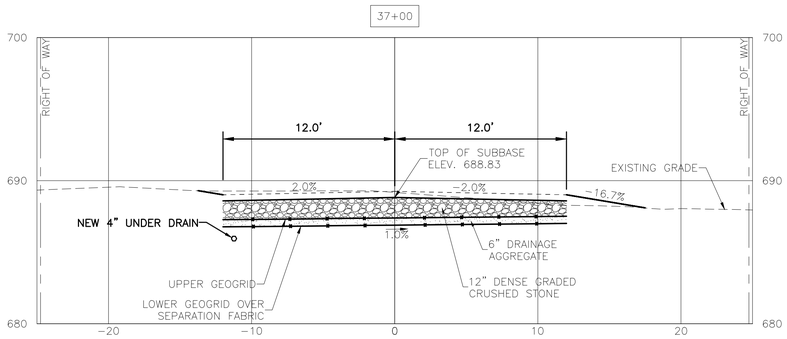

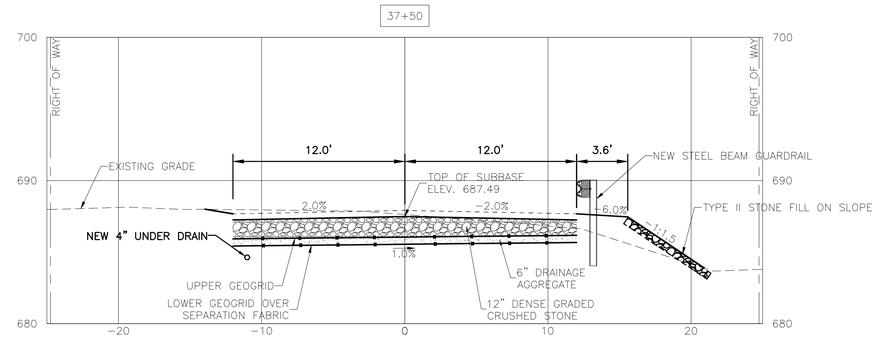

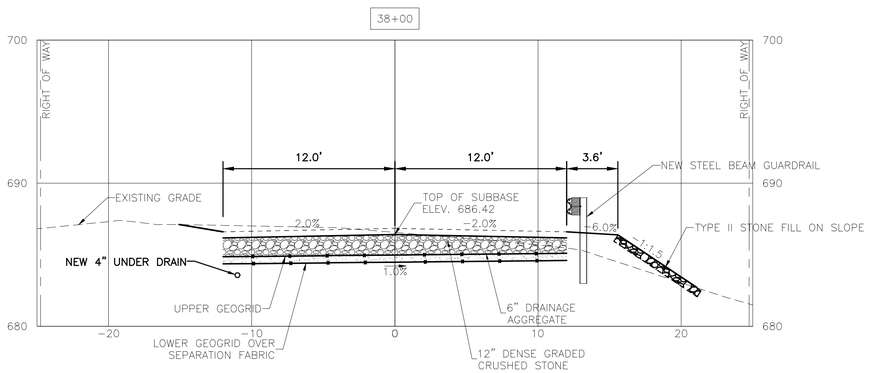

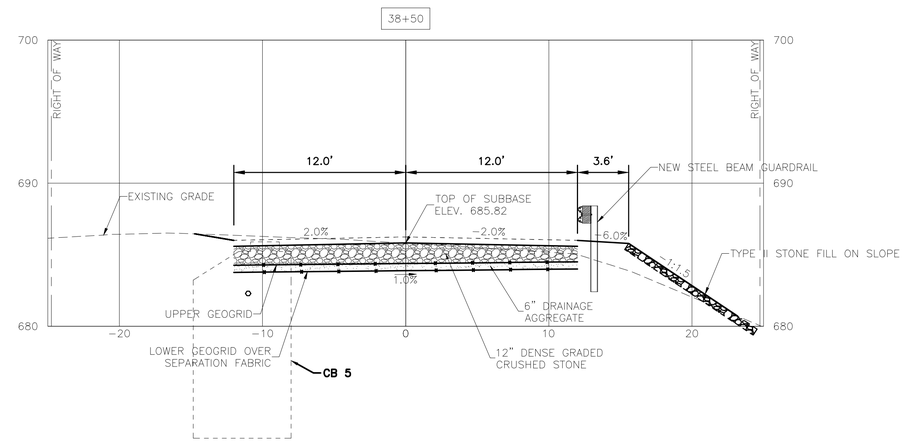

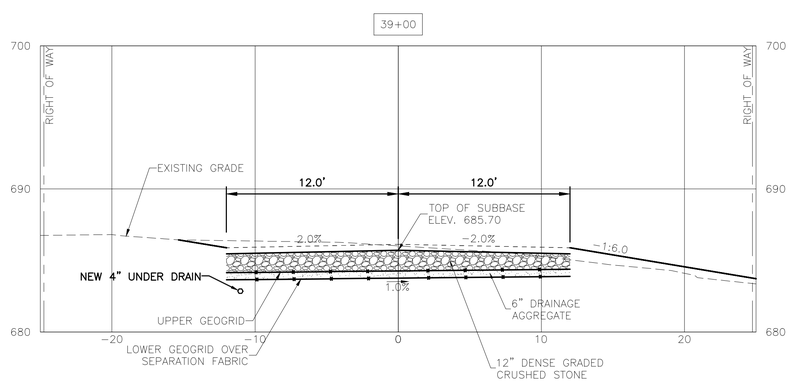

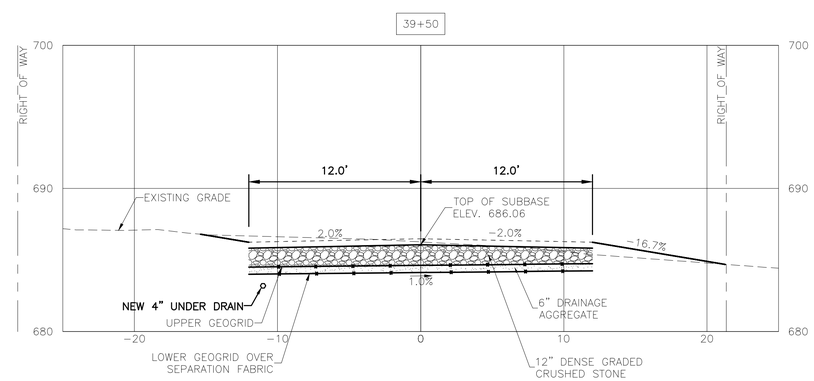

GRAPHIC SCALE

5 0 2.5 5 10 20

(IN FEET)

FINAL DESIGN
SUBMITTAL
NOT FOR CONSTRUCTION

DUFRESNE GROUP
CONSULTING ENGINEERS
56 Main Street, Suite 200
Springfield, Vermont 05156
E-mail: info@dufresnegroup.com
Web: www.dufresnegroup.com
• • •
Springfield, VT • Tel: (802) 674-2904 Fax: (802) 674-2913
Barre, VT • Tel: (802) 479-3698
St. Johnsbury, VT • Tel: (802) 748-8605
Manchester, VT • Tel: (802) 768-8291
• • •
Dufresne Group is owned by Dufresne & Associates, PC

STATE OF VERMONT
ROBERT E. DUFRESNE
NO. 3834
CIVIL
LICENSED PROFESSIONAL ENGINEER

2-6-17

REVISIONS

DATE	COMMENTS	BY

THIS DRAWING SHALL NOT BE REUSED OR ALTERED IN ANY WAY WITHOUT THE WRITTEN APPROVAL AND AUTHORITY OF DUFRESNE GROUP. ANY REVISIONS SHALL BE MADE BY DUFRESNE GROUP ©

NORTHFIELD STREET UTILITIES IMPROVEMENTS

ROAD & SIDEWALK CROSS SECTIONS STATION 37+00 TO 39+50

CITY OF MONTPELIER, VERMONT

Project #	8160003
Project Mgr.	R.E. DUFRESNE
Design by	B.L. BAKER
Drawn by	B.L. BAKER
Reviewed by	T.P. KNAPP
Approved by	R.E. DUFRESNE
Date	FEBRUARY 6, 2017
Scale	AS SHOWN

C37

FILE: R:\Montpelier VT\City of Montpelier\8160003 - Northfield Street Utilities\CAD\8160002 - Northfield Street Cross Sections.dwg Feb 08, 2017 - 5:43pm

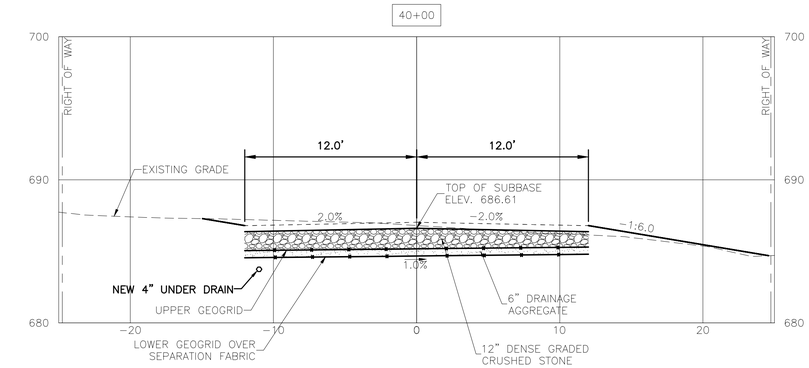

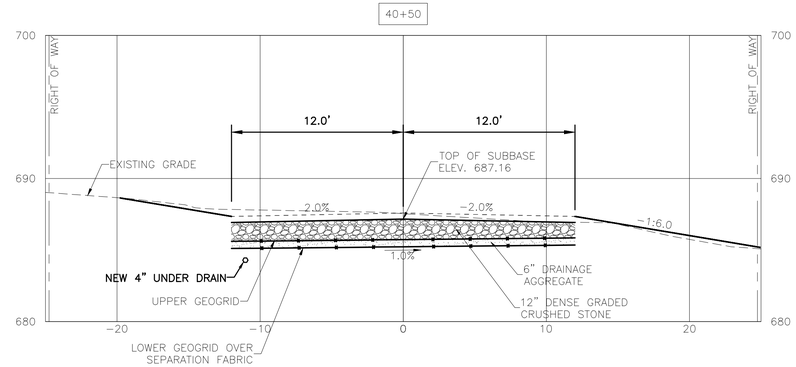

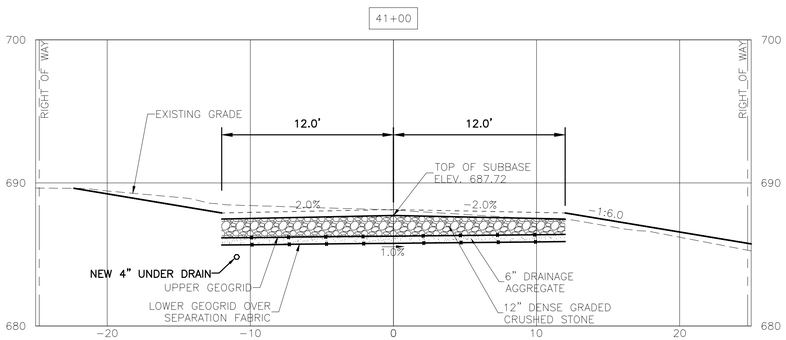

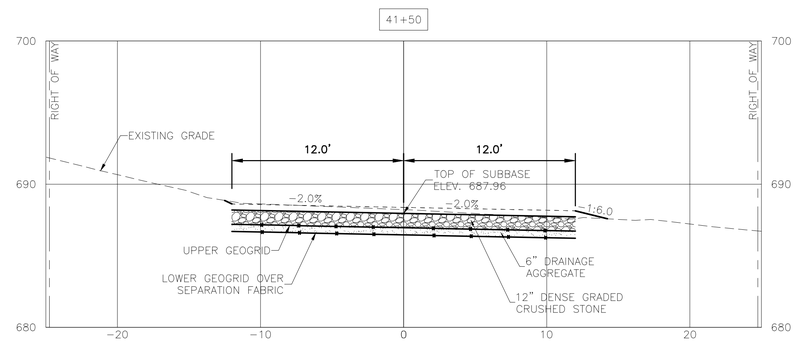

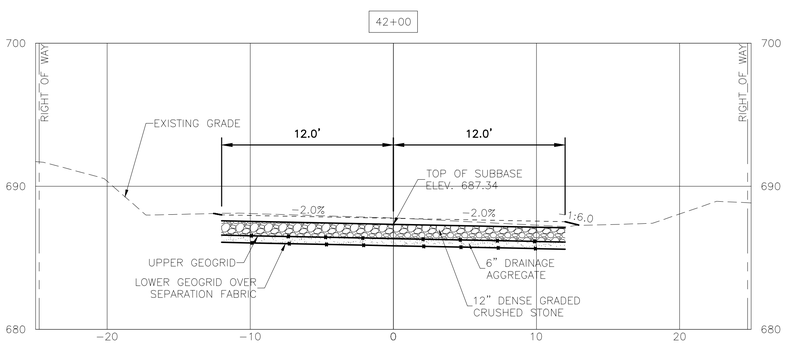

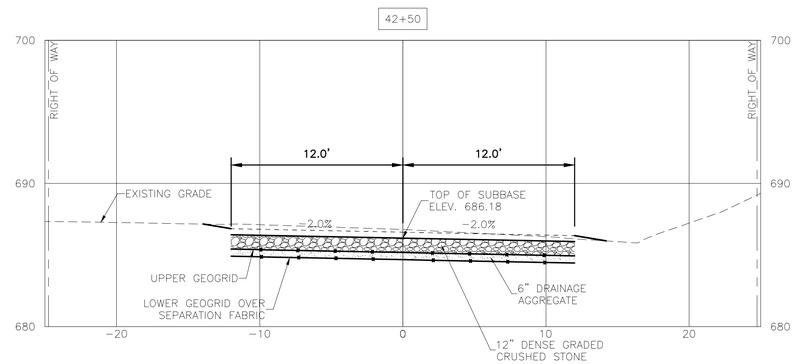

GRAPHIC SCALE

5 0 2.5 5 10 20

(IN FEET)

FINAL DESIGN SUBMITTAL
NOT FOR CONSTRUCTION

DUFRESNE GROUP
CONSULTING ENGINEERS
56 Main Street, Suite 200
Springfield, Vermont 05156
E-mail: info@dufresnegroup.com
Web: www.dufresnegroup.com
• • •
Springfield, VT • Tel: (802) 674-2904 Fax: (802) 674-2913
Barre, VT • Tel: (802) 479-3698
St. Johnsbury, VT • Tel: (802) 748-8605
Manchester, VT • Tel: (802) 768-8291
• • •
Dufresne Group is owned by Dufresne & Associates, PC

STATE OF VERMONT
ROBERT E. DUFRESNE
NO. 3834
CIVIL
LICENSED PROFESSIONAL ENGINEER

2-6-17

REVISIONS

DATE	COMMENTS	BY

THIS DRAWING SHALL NOT BE REUSED OR ALTERED IN ANY WAY WITHOUT THE WRITTEN APPROVAL AND AUTHORITY OF DUFRESNE GROUP. ANY REVISIONS SHALL BE MADE BY DUFRESNE GROUP ©

NORTHFIELD STREET UTILITIES IMPROVEMENTS

ROAD & SIDEWALK
CROSS SECTIONS
STATION 40+00 TO 42+50

CITY OF MONTPELIER, VERMONT

Project #	8160003
Project Mgr.	R.E. DUFRESNE
Design by	B.L. BAKER
Drawn by	B.L. BAKER
Reviewed by	T.P. KNAPP
Approved by	R.E. DUFRESNE
Date	FEBRUARY 6, 2017
Scale	AS SHOWN

C38

FILE: R:\Montpelier VT\City of Montpelier\8160003 - Northfield Street Utilities\CAD\8160002 - Northfield Street Cross Sections.dwg Feb 08, 2017 - 5:43pm