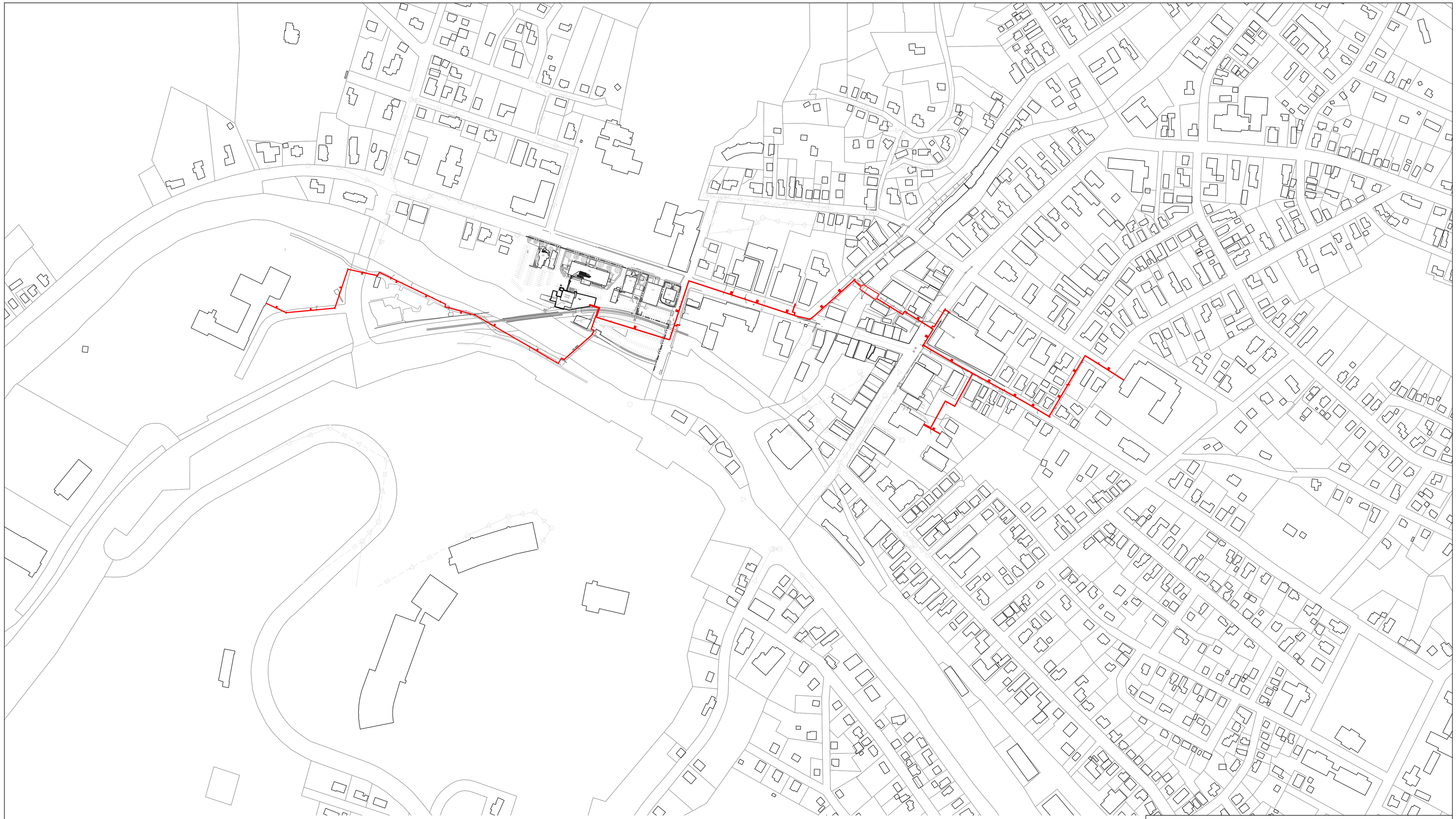

1 D-0 INITIAL PIPING LAYOUT
SCALE: NTS

MONTPELIER, VT
DISTRICT HEATING
PROPOSED INITIAL PIPING

PRELIMINARY	CHECKED: DWW	SCALE: NTS
PROPOSAL	DRAWN: TWT	DATE: 04/29/2011

RDA Engineering
134 South Avenue, Suite 100, Marietta, Georgia, 30060
www.rdaeng.com, Tel. 770-421-0870, Fax 770-421-0885

D-0

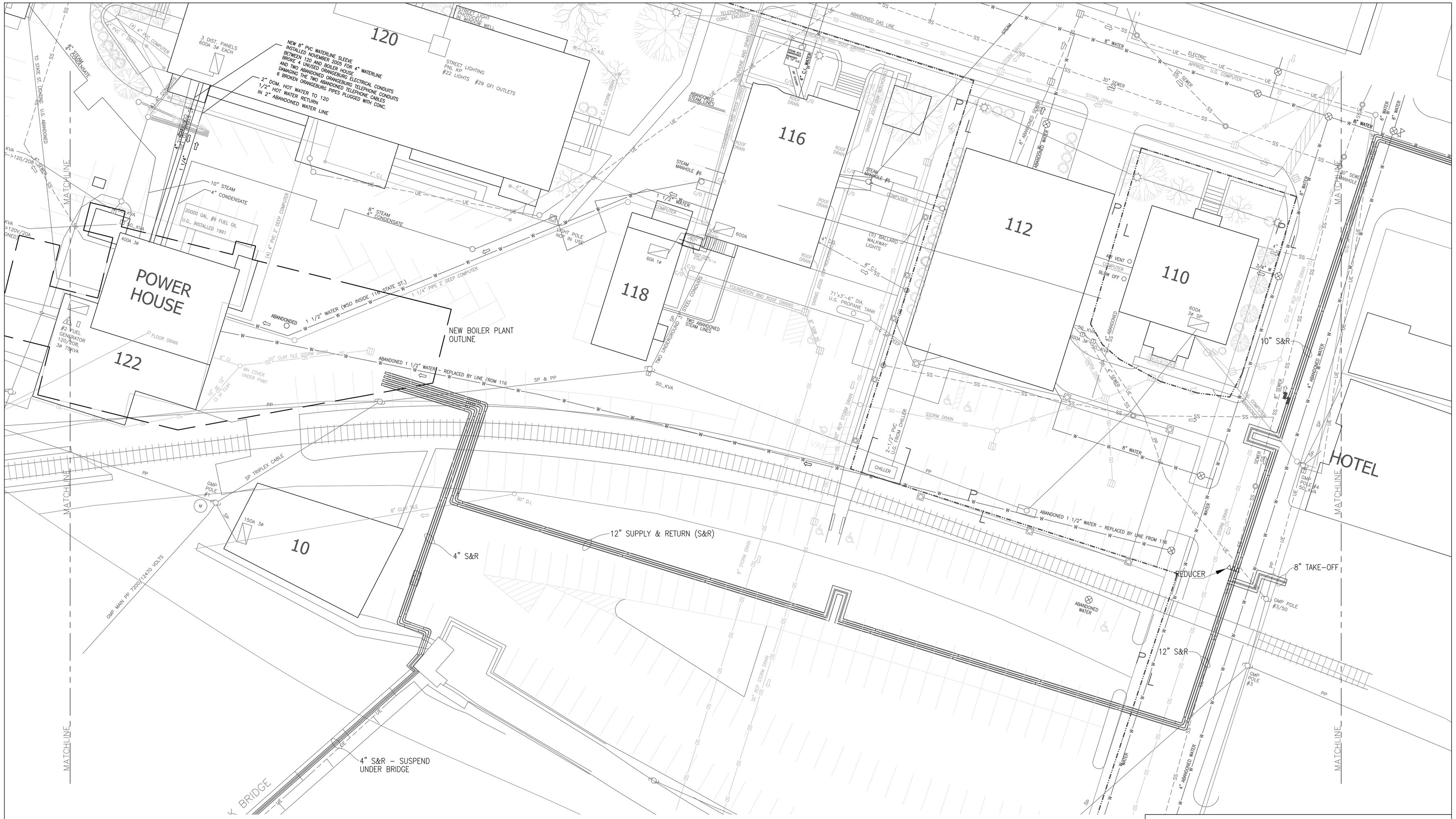

1 / D-1 SERVICE AREA MAP
SCALE: 1:20

MONTPELIER, VT DISTRICT HEATING PROPOSED INITIAL PIPING

PRELIMINARY	CHECKED: DWW	SCALE: 1:20
PROPOSAL	DRAWN: TWT	DATE: 04/29/2011

RDA Engineering
134 South Avenue, Suite 100, Marietta, Georgia, 30060
www.rdaeng.com, Tel. 770-421-0870, Fax 770-421-0885

D-1

1 / D-2 SERVICE AREA MAP
SCALE: 1:20

MONTPELIER, VT
DISTRICT HEATING
PROPOSED INITIAL PIPING

PRELIMINARY	CHECKED: DWW	SCALE: 1:20
PROPOSAL	DRAWN: TWT	DATE: 04/29/2011

RDA Engineering
134 South Avenue, Suite 100, Marietta, Georgia, 30060
www.rdaeng.com, Tel. 770-421-0870, Fax 770-421-0885

D-2

1 D-3 SERVICE AREA MAP
SCALE: 1:20

MONTPELIER, VT
DISTRICT HEATING
PROPOSED INITIAL PIPING

PRELIMINARY	CHECKED: DWW	SCALE: 1:20
PROPOSAL	DRAWN: TWT	DATE: 04/29/2011

RDA Engineering
134 South Avenue, Suite 100, Marietta, Georgia, 30060
www.rdaeng.com, Tel. 770-421-0870, Fax 770-421-0885

D-3

1 D-4 SERVICE AREA MAP
SCALE: 1:20

MONTPELIER, VT
DISTRICT HEATING
PROPOSED INITIAL PIPING

PRELIMINARY	CHECKED: DWW	SCALE: NTS
PROPOSAL	DRAWN: TWT	DATE: 04/29/2011

RDA Engineering
134 South Avenue, Suite 100, Marietta, Georgia, 30060
www.rdaeng.com, Tel. 770-421-0870, Fax 770-421-0885

D-4

1 D-4.1 SERVICE AREA MAP
SCALE: 1:20

MONTPELIER, VT
DISTRICT HEATING
PROPOSED INITIAL PIPING

PRELIMINARY	CHECKED: DWW	SCALE: NTS
PROPOSAL	DRAWN: TWT	DATE: 04/29/2011

RDA Engineering
134 South Avenue, Suite 100, Marietta, Georgia, 30060
www.rdaeng.com, Tel. 770-421-0870, Fax 770-421-0885

D-4.1

1 / D-5 SERVICE AREA MAP
SCALE: 1:20

MONTPELIER, VT
DISTRICT HEATING
PROPOSED INITIAL PIPING

PRELIMINARY	CHECKED: DWW	SCALE: 1:20
PROPOSAL	DRAWN: TWT	DATE: 04/29/2011

RDA Engineering
134 South Avenue, Suite 100, Marietta, Georgia, 30060
www.rdaeng.com, Tel. 770-421-0870, Fax 770-421-0885

D-5

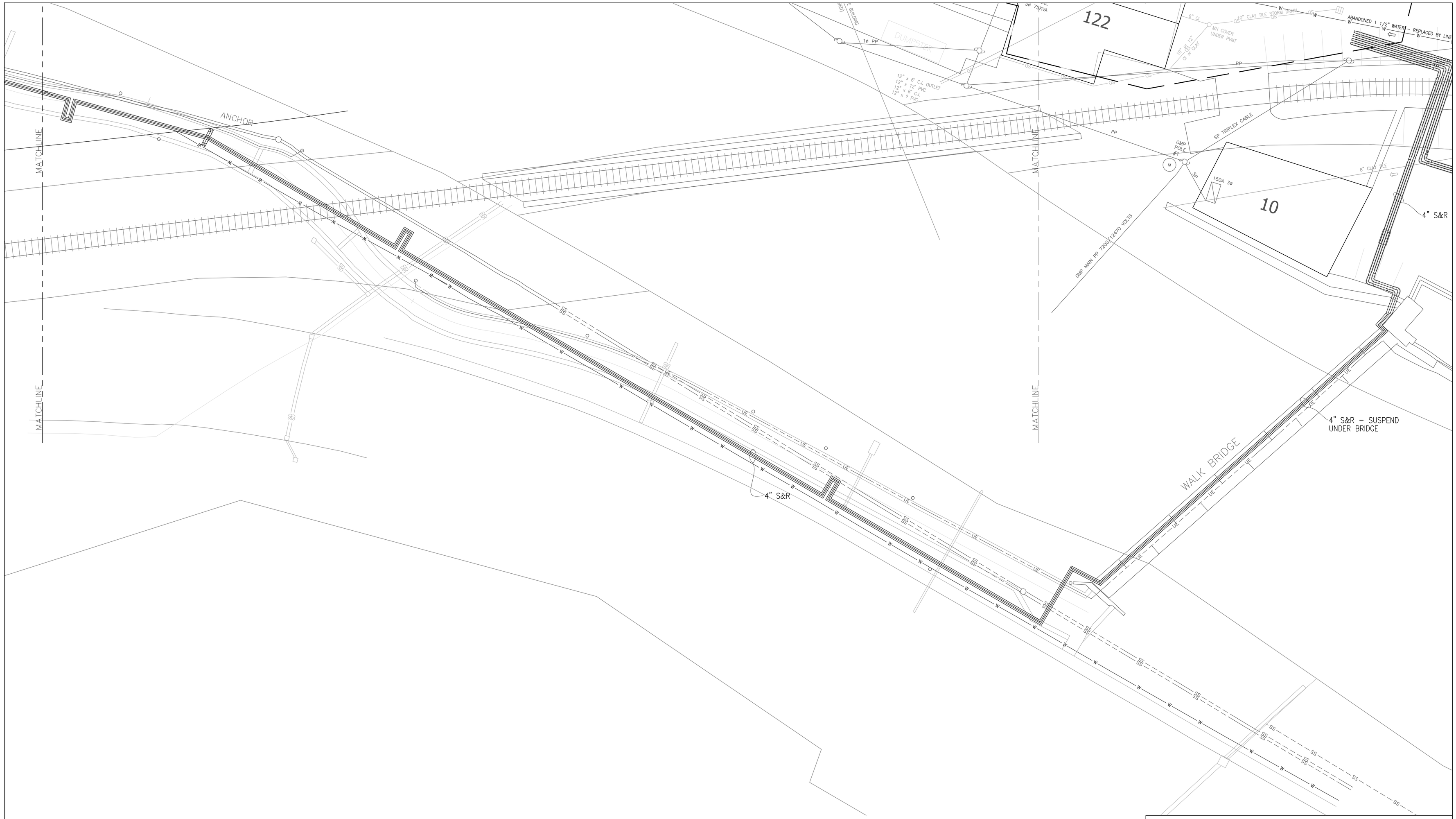

1 / D-6 SERVICE AREA MAP
SCALE: 1:20

N

MONTPELIER, VT
DISTRICT HEATING
PROPOSED INITIAL PIPING

PRELIMINARY	CHECKED: DWW	SCALE: 1:20
PROPOSAL	DRAWN: TWT	DATE: 04/29/2011

RDA Engineering
134 South Avenue, Suite 100, Marietta, Georgia, 30060
www.rdaeng.com, Tel. 770-421-0870, Fax 770-421-0885

D-6

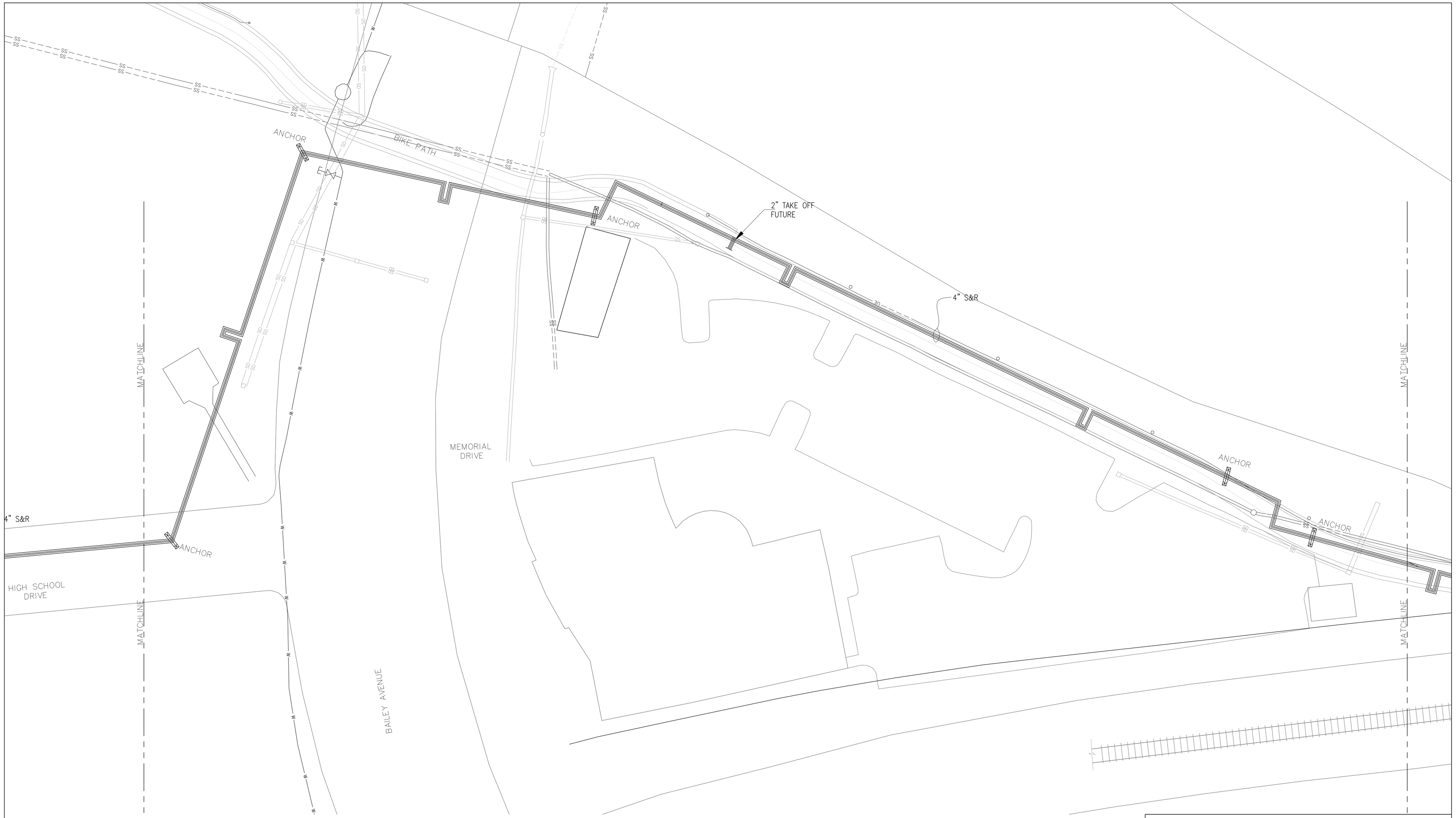

1 / D-7 SERVICE AREA MAP
SCALE: 1:20

N

MONTPELIER, VT
DISTRICT HEATING
PROPOSED INITIAL PIPING

PRELIMINARY	CHECKED: DWW	SCALE: 1:20
PROPOSAL	DRAWN: TWT	DATE: 04/29/2011

RDA Engineering
134 South Avenue, Suite 100, Marietta, Georgia, 30060
www.rdaeng.com, Tel. 770-421-0870, Fax 770-421-0885

D-7

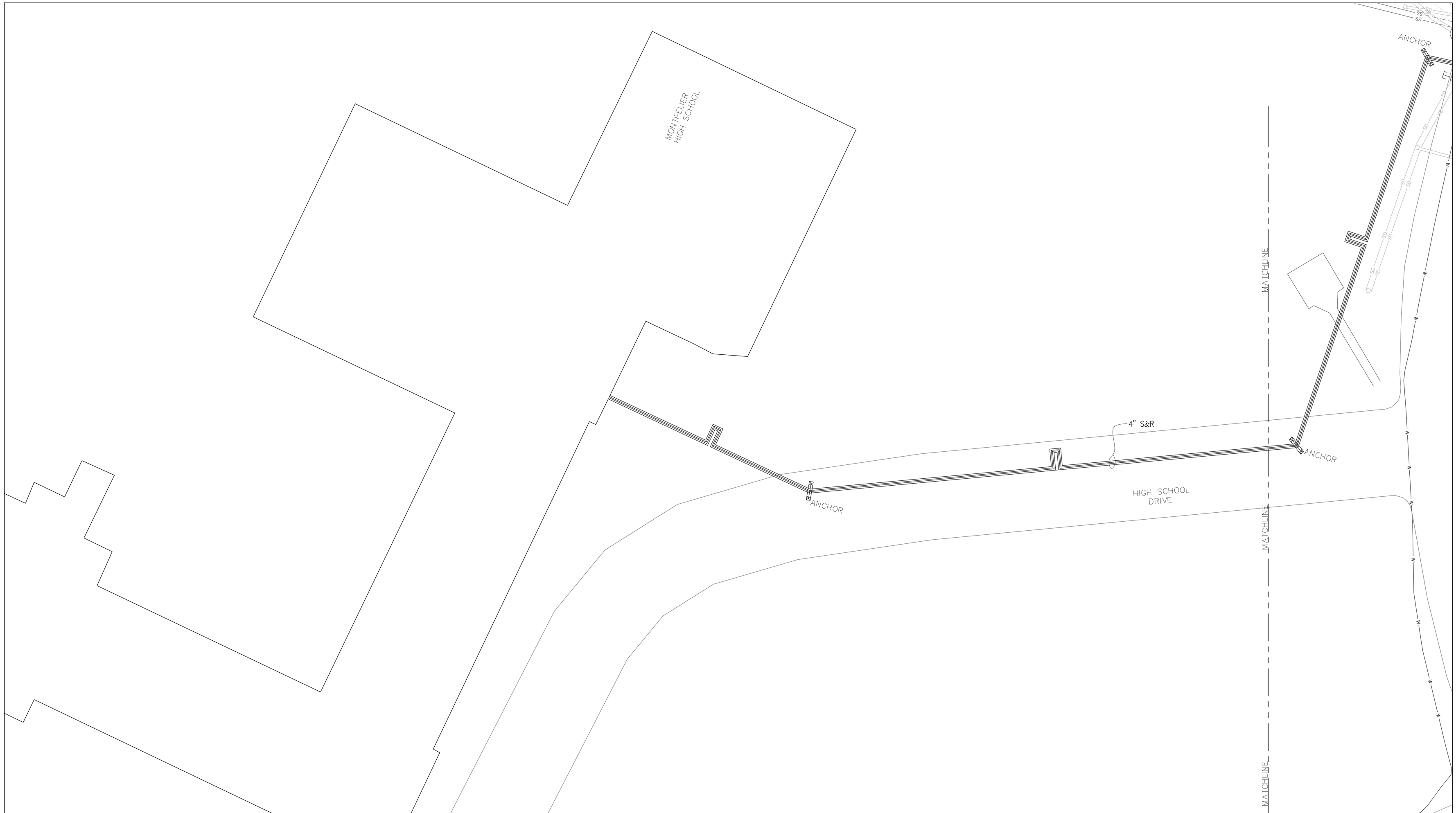

1 / D-8 SERVICE AREA MAP
SCALE: 1:20

MONTPELIER, VT
DISTRICT HEATING
PROPOSED INITIAL PIPING

PRELIMINARY	CHECKED: DWW	SCALE: 1:20
PROPOSAL	DRAWN: TWT	DATE: 04/29/2011

RDA Engineering
134 South Avenue, Suite 100, Marietta, Georgia, 30060
www.rdaeng.com, Tel. 770-421-0870, Fax 770-421-0885

D-8

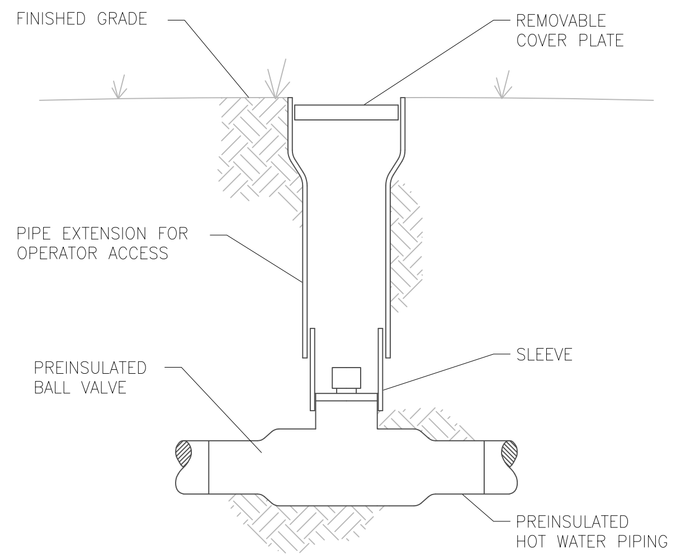

1 / D-9 DIRECT BURIED HOT WATER SHUT-OFF VALVE
SCALE: NONE

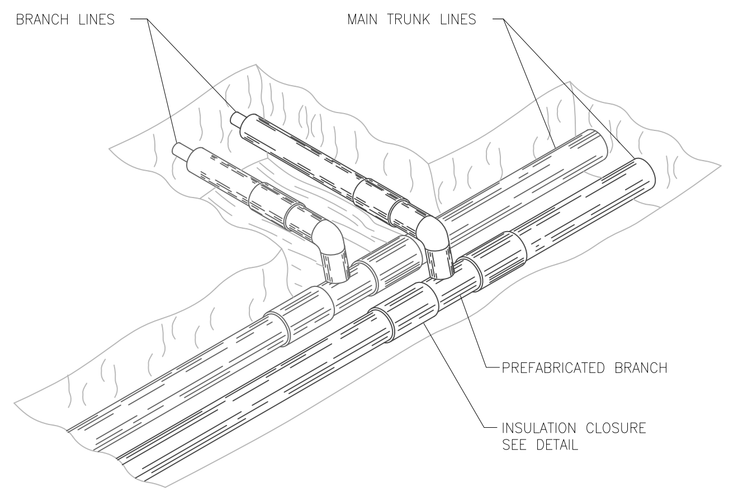

2 / D-9 PREFABRICATED BRANCH INSTALLATION DETAIL
SCALE: NONE

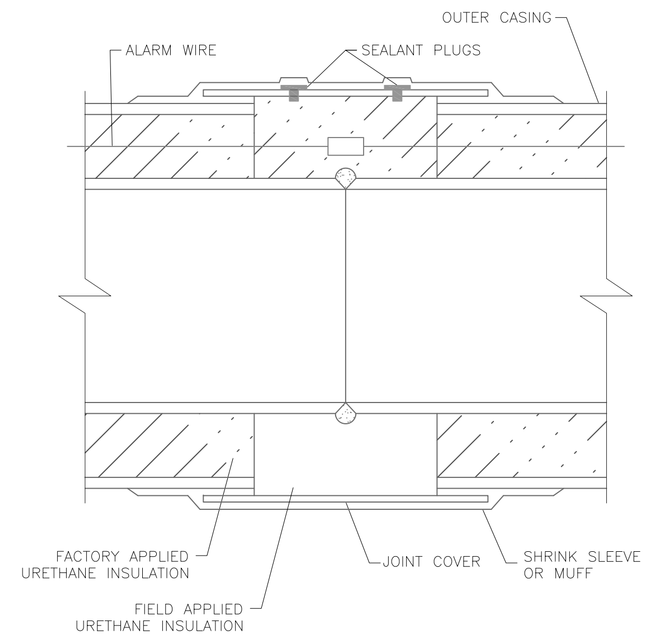

3 / D-9 TYPICAL PIPE JOINT DETAIL
SCALE: NONE

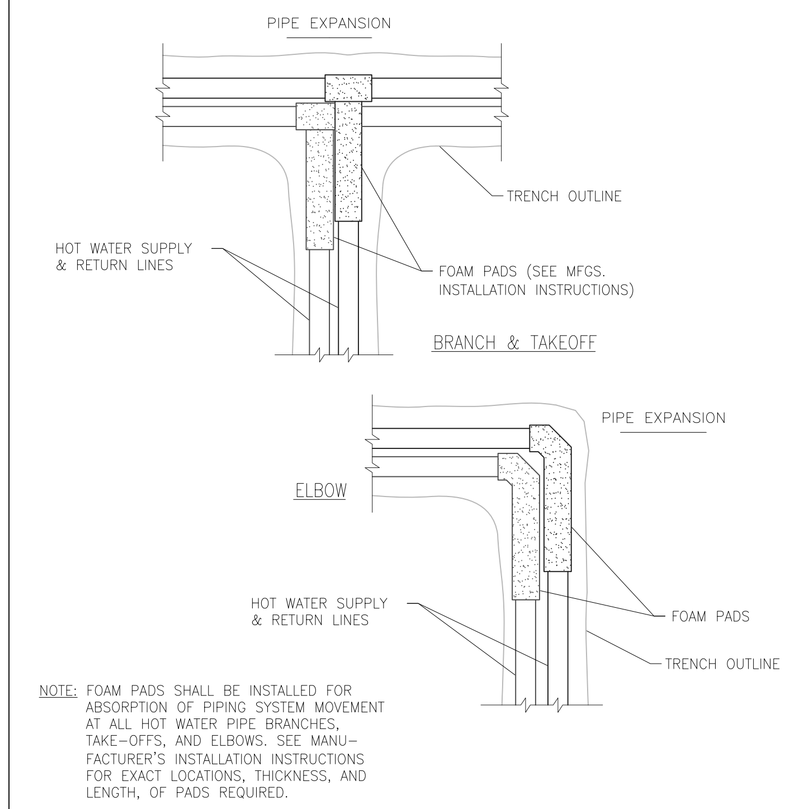

NOTE: FOAM PADS SHALL BE INSTALLED FOR ABSORPTION OF PIPING SYSTEM MOVEMENT AT ALL HOT WATER PIPE BRANCHES, TAKE-OFFS, AND ELBOWS. SEE MANUFACTURER'S INSTALLATION INSTRUCTIONS FOR EXACT LOCATIONS, THICKNESS, AND LENGTH, OF PADS REQUIRED.

4 / D-9 PREINSULATED PIPE FOAM PAD PLACEMENT DETAIL
SCALE: NONE

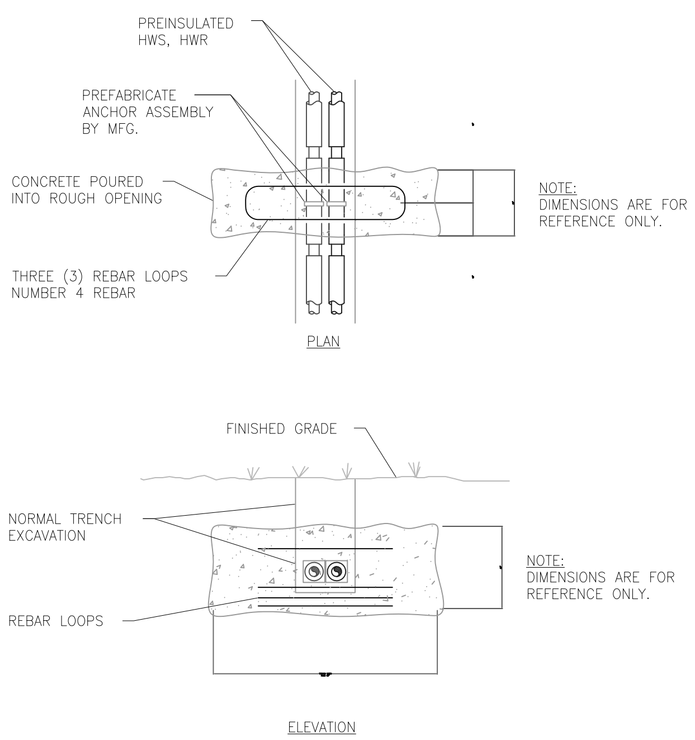

NOTE: DIMENSIONS ARE FOR REFERENCE ONLY.

5 / D-9 ANCHOR BLOCK DETAIL
SCALE: NONE

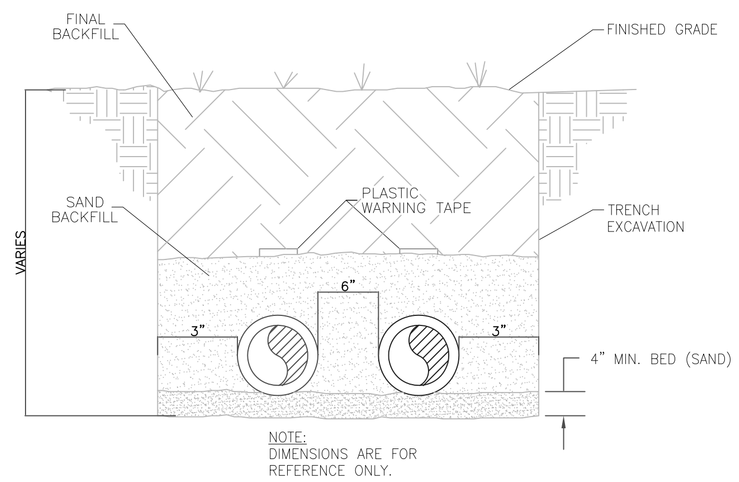

NOTE: DIMENSIONS ARE FOR REFERENCE ONLY.

6 / D-9 UNDERGROUND PIPING TRENCH DETAIL
SCALE: NONE

EXCAVATION

NOMINAL PIPE	TRENCH DEPTH	TRENCH WIDTH
12"	54"	48"
10"	54"	48"
8"	48"	42"
6"	48"	40"
4"	42"	36"
1-1/2" TO 3"	40"	30"

MONTPELIER, VT
DISTRICT HEATING
PROPOSED INITIAL PIPING

PRELIMINARY	CHECKED: DWW	SCALE: NONE
PROPOSAL	DRAWN: TWT	DATE: 04/29/2011

RDA Engineering
134 South Avenue, Suite 100, Marietta, Georgia, 30060
www.rdaeng.com, Tel. 770-421-0870, Fax 770-421-0885

D-9