# City of Montpelier, VT

## District Heat Distribution System

# Standards and Guidelines

## For Designing Heating Systems In Buildings Connected to a Hot Water Distribution System


**Presented by:**

**John Butterfield**
**Commissioning Engineer**

**William Neuburger**
**Senior Mechanical Engineer**


February 18, 2013

Hallam ICS

# Agenda

- Sign-In
- Introductions
- Review key points in the Guideline
- Required Items - (“must have”)
- Recommended Items – (“should have”)
- Questions & Discussions

# 1. Introduction

- Purpose
  - Assist district heating customers and installers in understanding the
    - System connection requirements
    - Design parameters
    - Hot water service requirements

- Intent of this Guideline - This guideline is designed to present:
  - Technical information concerning the operational reliability for the installation of this system
  - Minimum standards governing system installations according to the Vermont Division of Fire Safety (VFBSC) 2012
    - This code references the International Building Code (2012) and all other codes referenced within.

# Table of Contents

**The Guideline consists of the following sections:**


1. Introduction
2. Primary Hot Water System Design
3. Secondary Hot Water System Design
4. District Energy Interface – Primary System Design
5. Customer Interface – Secondary System Design
6. Procedure for Connecting Hot Water Service
7. Preventative Maintenance

- Glossary

# 1. Introduction

- Objective
  - Installations designed in accordance with these guidelines should:
    - Operate satisfactorily with
    - Minimal maintenance operating costs
  - Operating and maintenance costs are generally low due to the simplicity of circulating water systems with:
    - High efficiency pumps
    - Control valves or variable speed pumps for accurate / efficient control

# 1. Introduction - Overview

- The Utility Company's hot water is provided from the State plant located at 122 State Street.

- The Utility Company circulates the hot water through underground pipes to supply and return water from the customers.
  - Utility Company Hot Water Distribution = "Primary Loop"

- To service a building connection from the primary hot water network, pipes are sized for the building load and extended through the building foundation walls.
  - Building Hot Water Distribution = "Secondary Loop"

- The service connections for the primary supply and return water are terminated with shut off valves that are reserved exclusively for the Utility Company's servicing requirements.

# 2.1 Heat Exchangers

- Heat exchangers are required for all installations
  - To exchange heat from the utility loop to the building
  - To provide isolation from the distribution (primary loop) supply temperature and pressures.
  - Heat exchangers shall be selected so that the temperature drop on the primary side is at least 50° F

- All connections to the primary distribution system must be through heat exchangers!!!

# 2.1 Temperature Requirements

- To ensure the system economics are met, minimum requirements were established for all customers.
  - Under heating design day conditions, the Utility Company provides 220° F hot water at pressures up to 100 psig.
  - The most efficient operation for a district heating system is obtained when low temperature water is returned from the customer to the plant
  - One of the requirements, written in the contract between the customer and the Utility Company, is that the temperature of the primary loop return water from the customer's building must be maintained below 170° F.
- Adherence to this standard benefits everyone because system efficiency is increased which lowers the customer's district heating costs.

# 2.1 Seasonal Temperature Reset

- The Utility Company supplies hot water to its distribution system at different temperatures, depending upon the heating vs. non-heating season.

- Table 2-1 Primary Hot Water Loop Temperatures

| Temperatures | Heating Season Dates: (TBD) | Non-Heating Season Dates: (TBD) |
|---|---|---|
| Hot Water Supply Temp. | 220° F | 180° F |
| Hot Water Return Temp. | 170° F | 160° F |

- A modulating control valve in the primary loop controls the flow through the heat exchanger in order to maintain a constant discharge temperature.

# 2.2 System Pressure

- Maximum primary hot water system pressure is 150 psig.
- All the Utility Company customers are required to connect to primary service valves with piping rated for:
  - 150 psig and…
  - Able to withstand 195 psig test pressure to the heat exchanger
- Requirements must be met prior to permitting service.

# 3. Secondary System Design

- The building loop supply water temperature is controlled by increasing or decreasing the secondary water supply flow through the heat exchanger.

- To reduce energy consumption it is recommended that the building supply water temperature be reset to a lower temperature setting as outdoor air temperature rises and vice versa.

# Fig. 3-1 Utility Company Typical Interface

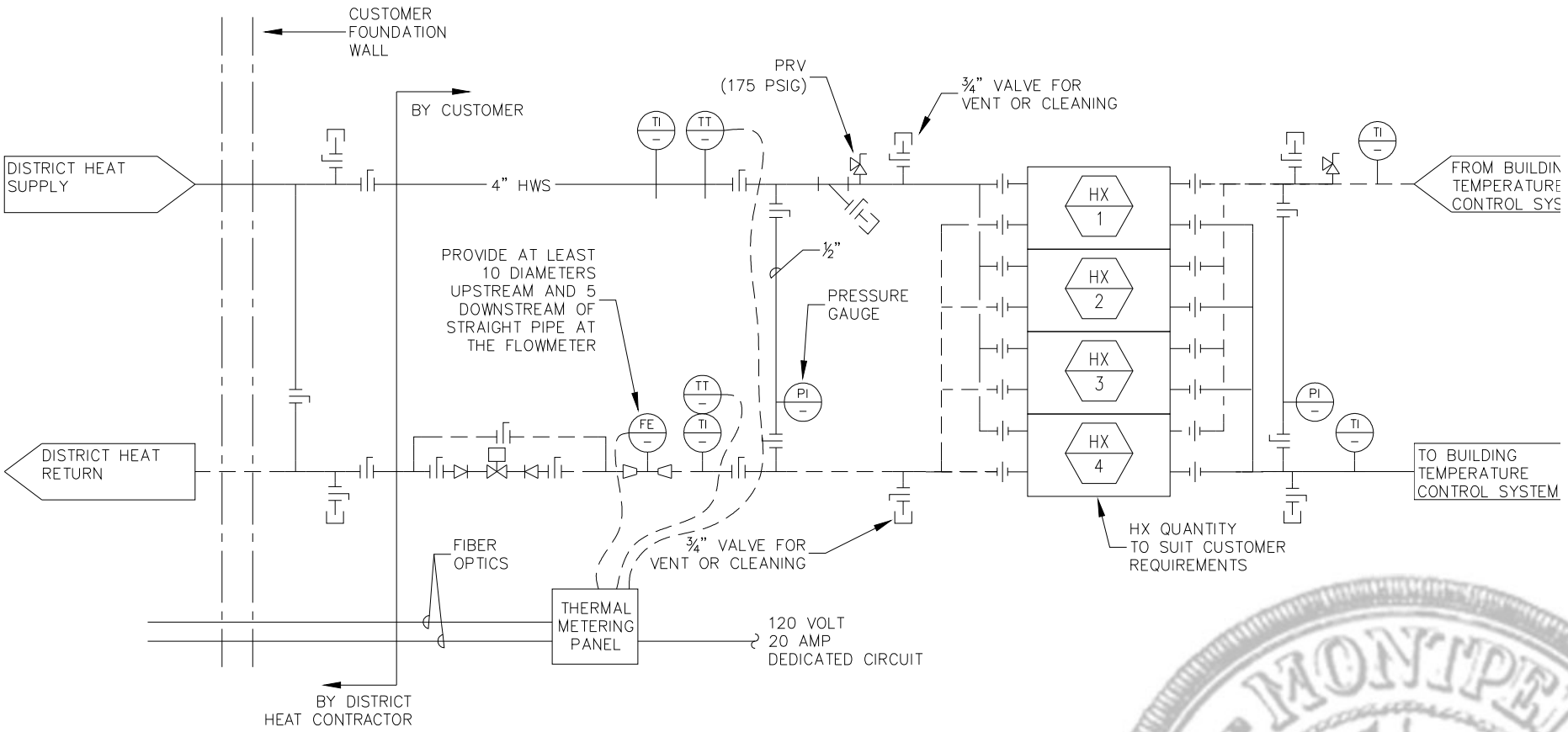

# Table 3-1 Common Design Temperatures for Heat Exchangers

| | Primary Side | | Secondary Side | |
|---|---|---|---|---|
| **Type** | Temp In<br>Deg F | Temp Out<br>Deg F | Temp In<br>Deg F | **Temp Out**<br>**Deg F** |
| **Air Side[1]** | 220 | 170 | 140 | **180** |
| **Hot Water Radiation** | 220 | 170 | 160 | **180** |
| **Reheat** | 220 | 170 | 140 | **170** |
| **In-Floor Radiation** | 220 | 170 | 115 | **140** |
| **Domestic Hot Water[2]** | **180** | **160** | **95** | **130** |

# Fig. 3-2 Typical Domestic Hot Water Piping

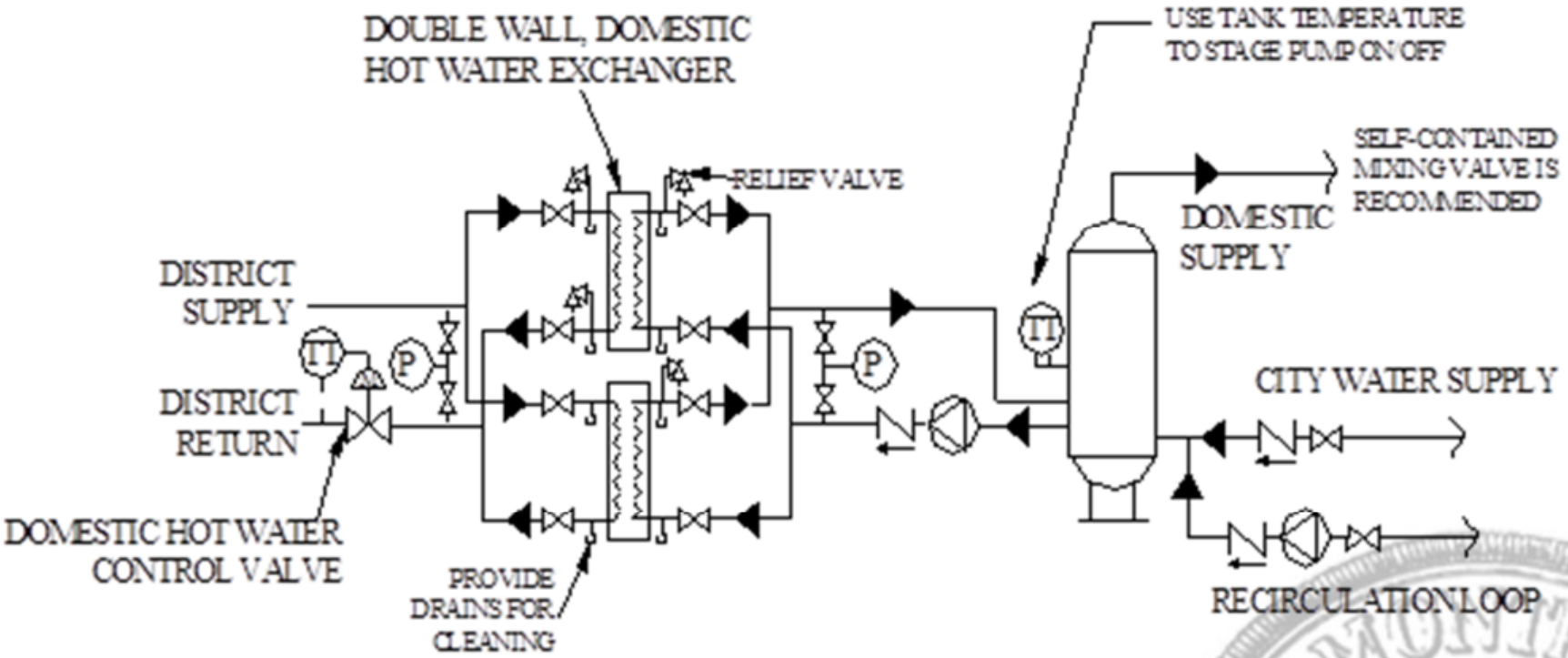

# Fig. 3-3 Alternate Domestic Hot Water Piping

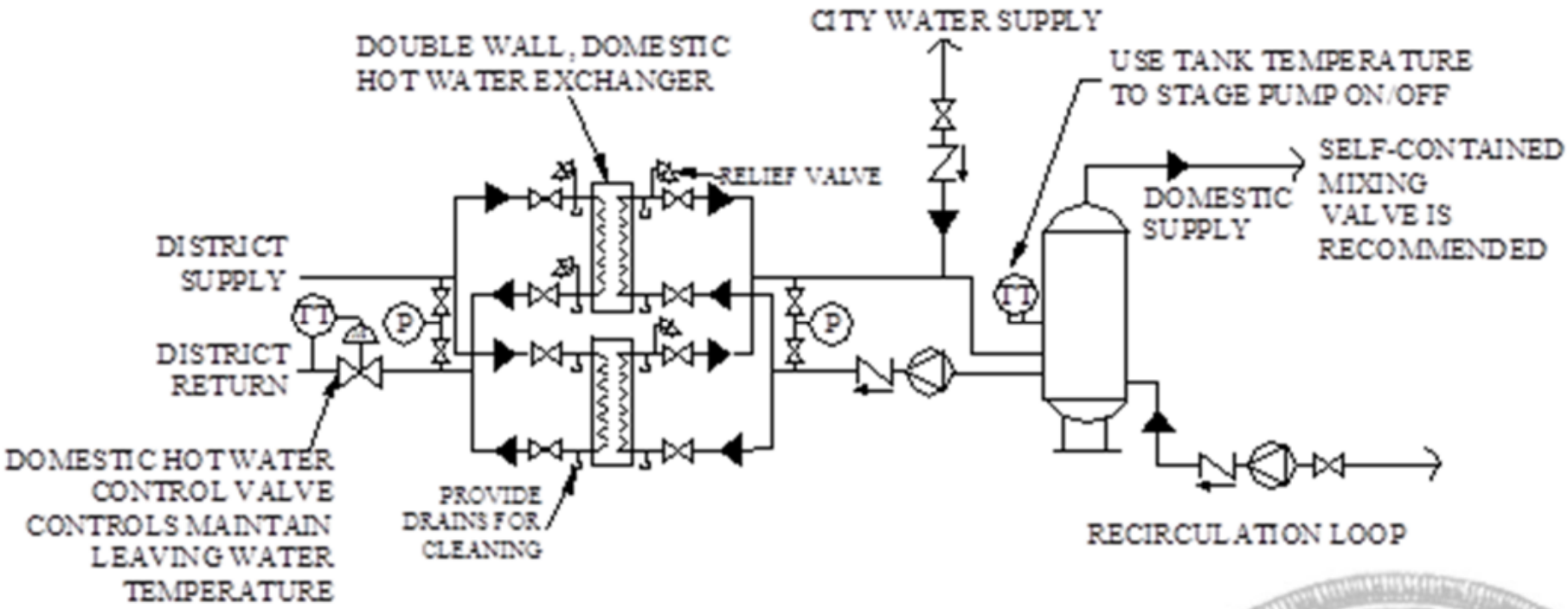

# 4.0 Primary System Design

- 4.1 District Piping
  - Carbon steel, schedule 40
  - Fittings of the same material & strength as associated piping
  - Welded or threaded, per the Standard
  - Threaded fittings: 250 lb. rated
- 4.1 Insulation
  - Per Vermont Commercial Building Energy Standards
- 4.2 Isolation / Shut-off Valves
  - Ball or butterfly type
  - Full shut-off
  - 150 psi working pressure

# 4.0 Primary System Design

- 4.3 Pressure and Temperature Gauges
  - Installed per typical piping diagram
  - Must be easily accessible for reading
  - Thermometers:
    - Installed in wells
    - Temperature range: 30 – 300 Deg.F.
  - Pressure Gauges:
    - 4-1/2” dials
    - Graduated in psi
    - Scale to be 150% of system operating pressure range

# 4.0 Primary System Design

- 4.4 Metering Equipment (Ref: Fig. 4.1)
  - Meters, sensors, thermowells furnished by the Utility Company
  - Meters sized by Utility Company per mechanical engineer's calcs.
  - Note required straight lengths of pipe at inlet & outlet of flowmeters
    - 10x Pipe Diameter at Inlet
    - 5x Pipe Diameter at Outlet
  - Temperature sensors:
    - Installed in temperature wells
    - Tip of probe in center of pipe, positioned in the flow
  - Strainer to protect the heat exchanger(s)
  - Gauges, valves, piping shown on Fig 4.1
  - Run fiber optic cable from service entrance to metering equipment
  - Utility Company will provide final wiring & hook-up

# 4.0 Primary Side (cont.)

- 4.5 Temperature Controls
  - Constant primary loop return temperature by modulating control valve.
    - Control valve override to begin the heating cycle
  - Secondary side temperature kept as low as possible
  - Controller requirements
  - Freeze avoidance and protection

- 4.6 Control Valves
  - Control valve configurations (1/3 – 2/3 valves for lines 3” and larger)
  - Motorized control valve pressure & temperature ratings
  - Separate valves for each heat exchanger
  - Materials of construction
  - Electronic controls
  - Pressure drop requirements
  - Supply line temperature sensor located close to heat exchanger
  - Install control valves on return sides of loops

# 4.0 Primary Side (cont.)

- 4.7 Heat Exchangers
  - Two units in parallel are recommended for reliability
  - Materials of construction
  - Pressure and temperature ratings
  - Utility has obtained heat exchanger pricing from vendors

- 4.8 Safety Valves
  - Designed per ASME codes
  - Discharge with proper floor drain routing
  - Sized to relieve 100% of heating capacity
  - Places where pressure & temperature relief valves are required:
    - Heat exchangers (on both primary & secondary sides)
    - Pressure vessels
    - Heating, domestic hot water & snowmelt systems
    - Located on the building supply side

# Fig. 4-1 Principal Connection Methods for Uniform flow

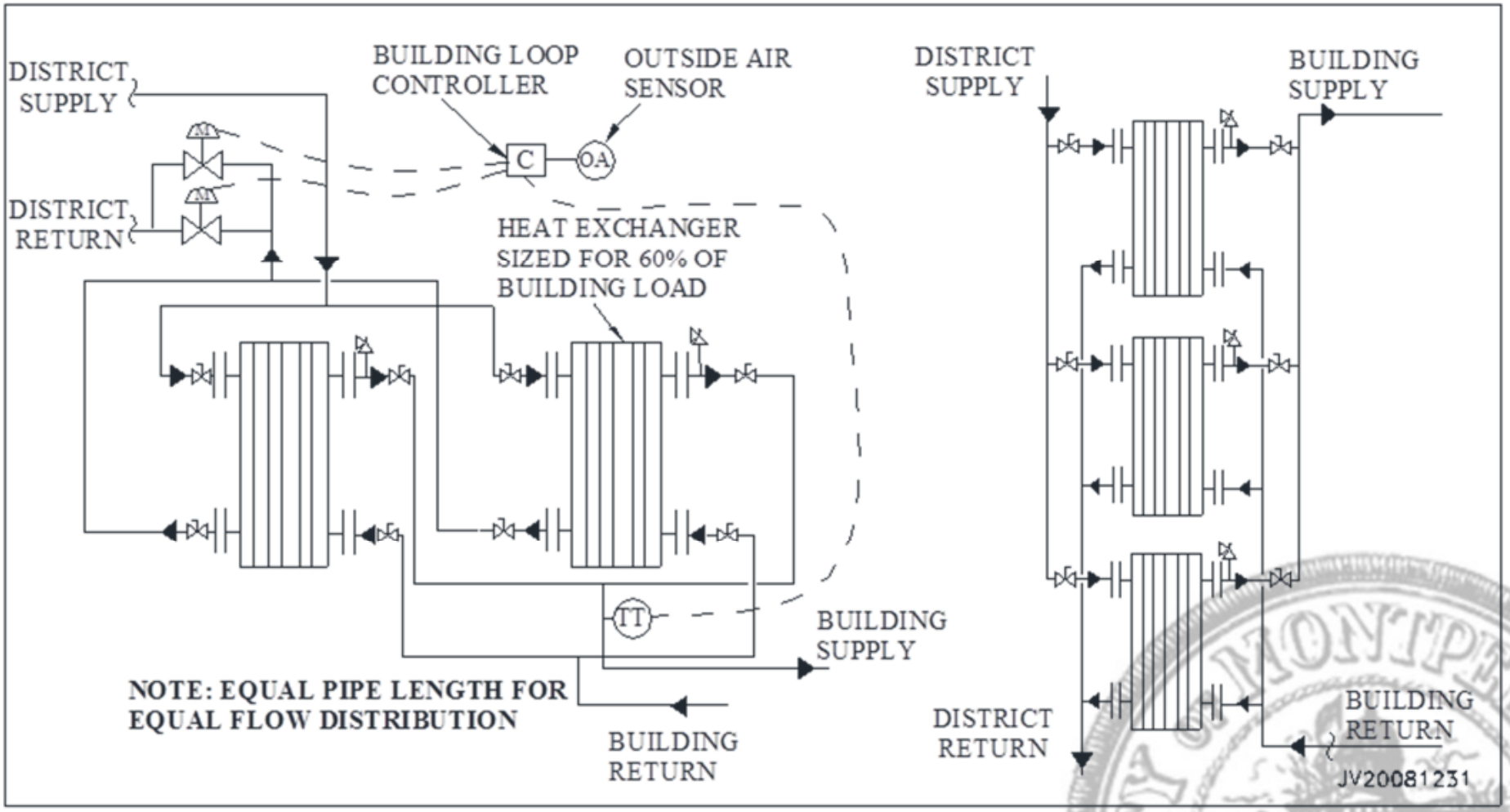

# 5.0 Secondary System Recommendations

- 5.1 Distribution Pumps
  - Two pumps – lead/lag operation
  - Flat pump curves
  - Loop pressure control through pump VFD
- 5.2 Expansion Tanks and Air Removal
- 5.3 Control Valves for Building Heating Equipment
  - Correct valve sizing is essential
  - Motorized valves sized to handle the pressure drops

# 6.0 Procedure for Connecting to Hot Water Service

- 6.1 Engineering Standards and Regulations
  - Heat exchangers are pressure vessels
  - Standards / Codes for Unfired Pressure Vessels
  - ASME stamp on the vessel
  - Hydrostatic testing required

- 6.2 Drawings and Specifications Requirement
  - PDF format
  - Owner/Installer is responsible
  - Submit to Utility Company prior to Issue for Bid

# 6.0 Procedure for Connecting to Hot Water Service

- 6.3 Mechanical Room
  - Sized per State Building Code
  - Access for Utility Company personnel

- 6.4 Construction Process
  - Utility company
    - Plan review
    - Construction observations
    - Document improper installation or materials
  - Owner/Installer
    - Ultimately responsible for system code compliance
    - Initiate remedial actions on observed discrepancies

# 6.0 Procedure for Connecting to Hot Water Service

- 6.5 New Service Startup
  - Primary Service Loop
    - Cleaning / Flushing
    - Pressure Testing
  - Secondary Service Loop
    - Per architect/engineer's specs
  - Inspections during testing
    - Owner
    - Utility Company
    - City of Montpelier
- 6.6 As-Built Drawings
  - PDF versions preferred over hard copies
  - Kept on file at Utility Company

# 7.0 Preventative Maintenance

- 7.1 Water Treatment
  - Corrosion protection & control of scaling
  - Routine water treatment testing
- 7.2 Strainers
  - Maximum pressure drop of 2 psid
  - Annual inspection & maintenance
- 7.3 Heat Exchangers
  - Periodic flushing
  - Maximum pressure drop of 5 psid
- 7.4 Control Valves
  - Full close off
  - Operate on temperature reset schedule

# Fig. 7-1 Heat Exchanger Cleaning Procedures

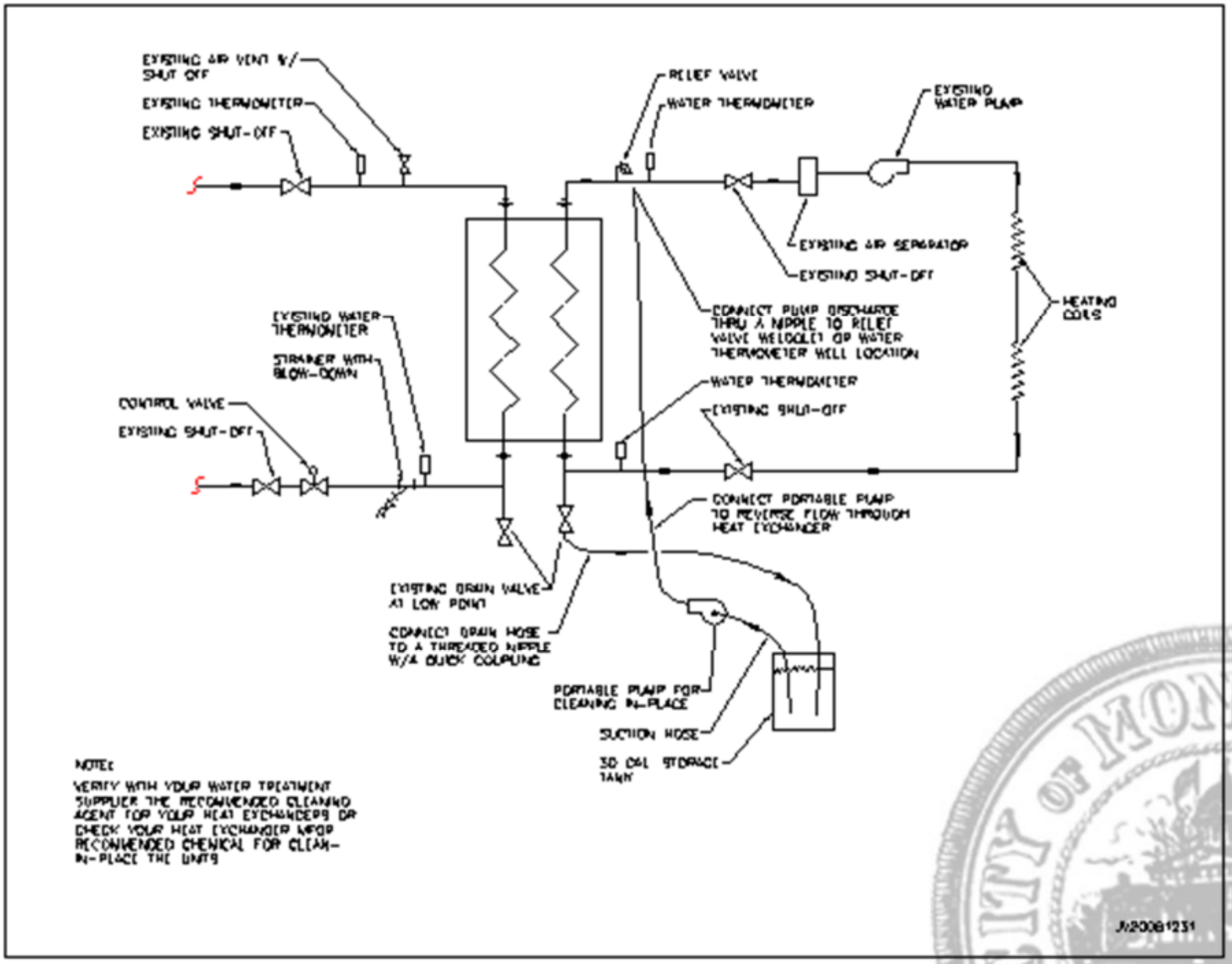

# Questions & Discussion

Hallam ICS

38 Eastwood Drive, Suite 200
South Burlington, VT 05403

Tel: 802.658.4891
Fax: 802.658.1457

www.Hallam-ICS.com
jbutterfield@Hallam-ICS.com